Status Readout

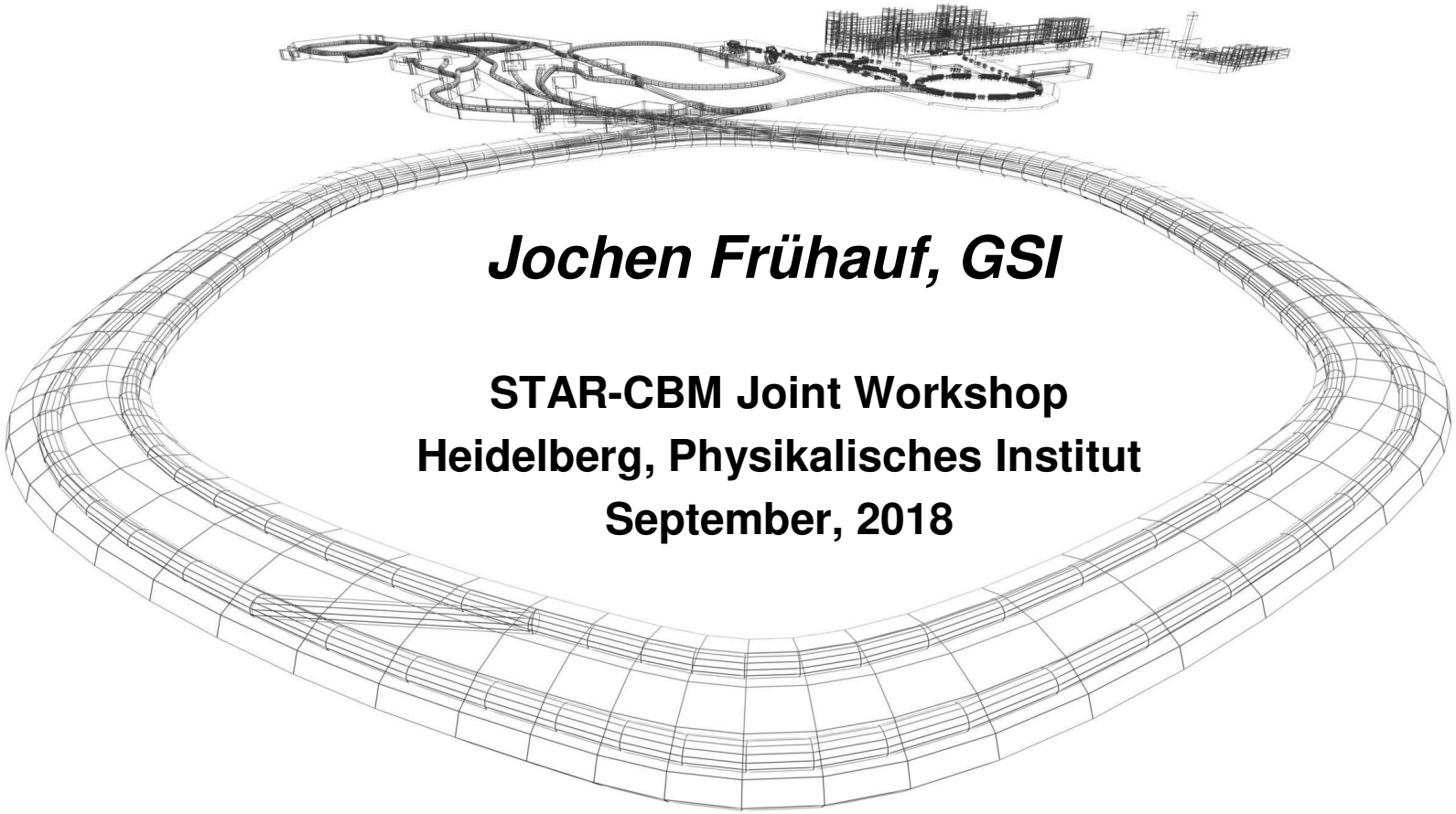

Jochen Frühauf, GSI

STAR-CBM Joint Workshop
Heidelberg, Physikalisches Institut
September, 2018

Outline

- CBM ToF @ STAR
- Readout Components
- Status FEE for STAR
- Firmware Status
  - implemented
  - open issues
- Power Supply & Distribution
- Summary and Outlook

installation in 2018

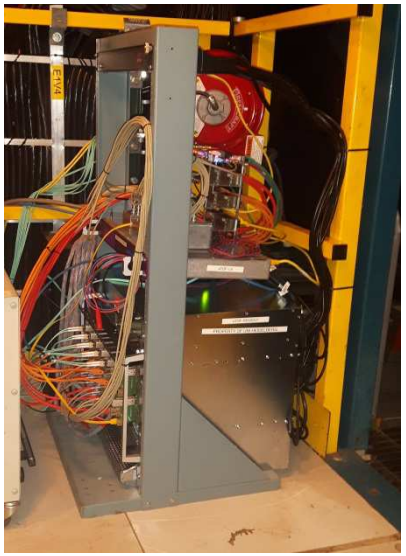

CBM ToF @ STAR

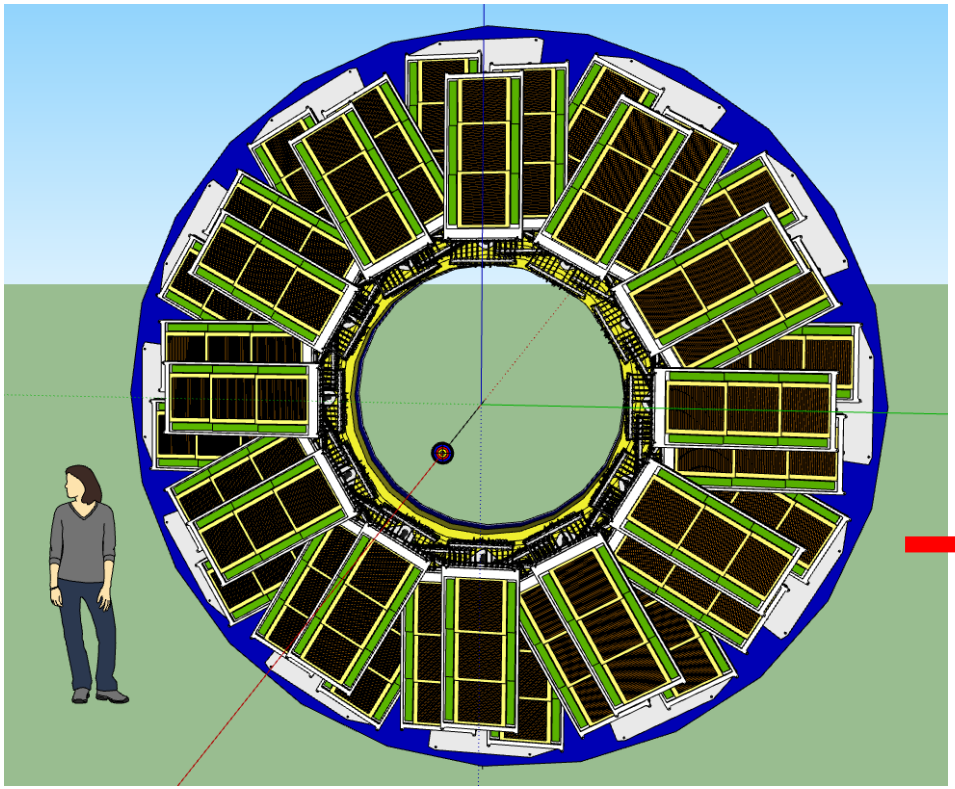

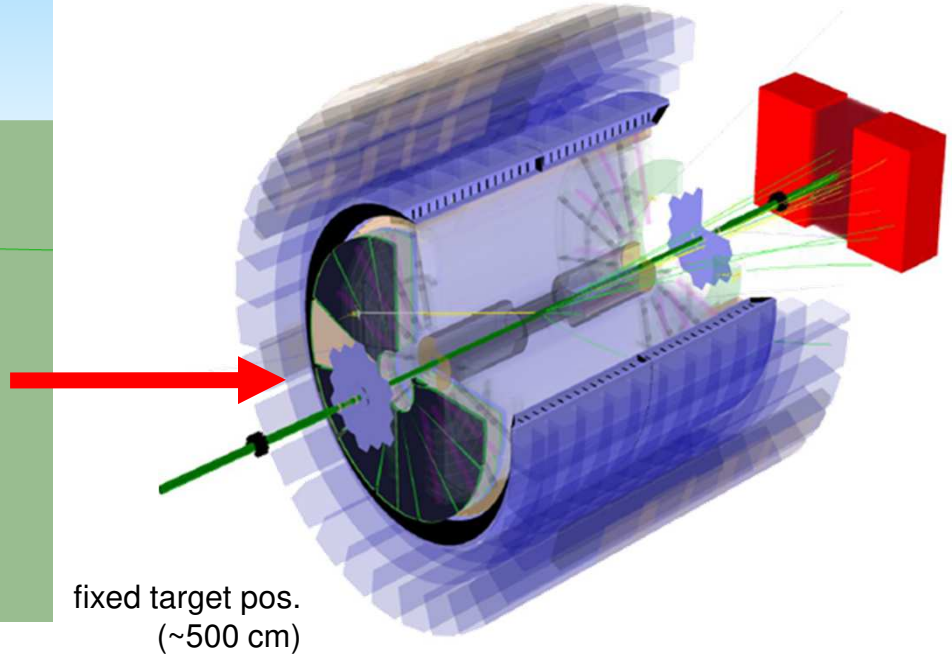

- **12 sectors**
- **36 modules**
- **108 MRPCs**
- **6912 channels**
- **637 electronic cards**

Readout Components

- PADI: Preamplifier board 32 CH

- Feed through PCB

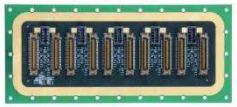

- GET4: TDC board 32 CH

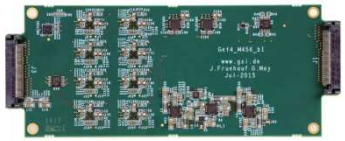

- Backplane with GBTx chip

- AFCK: FPGA board

- FLIB: FPGA PCI express card

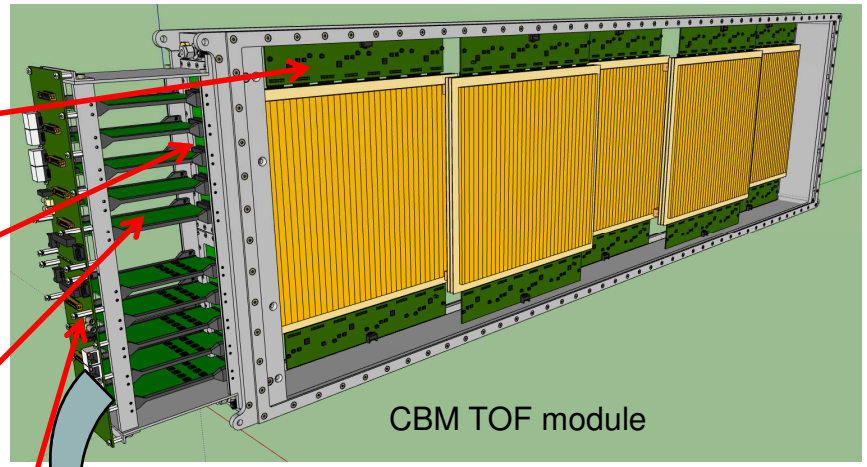

µTCA crate

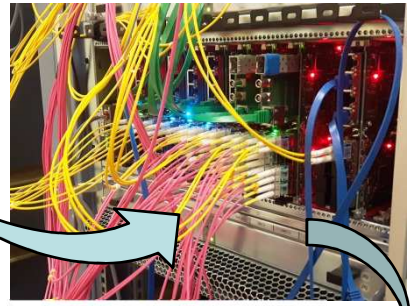

HP-PC

Status FEE for STAR

- 216 x PADI FEE
  - production finished
  - Yield 99% (ASIC Level 12 Chips reworked)
  - all PCBs are mounted
- 72 x Feed Through PCB
  - production finished
  - all PCBs are mounted
- 216 x GET4 FEE
  - production finished
  - Yield 97%
  - reworked 71 ASICs test ongoing
  - most of the PCBs are mounted
- 72 x GBTx Readout Board for ToF
  - 99 PCBs produced
  - SCA Chip not working so far
  - not all PCBs tested yet
  - a few non working PCBs found
    - 8 out of 42 tested ~20%
  - 24 PCBs are mounted
- 9 x CLK Distribution are available
- 1 x CLOSY is available
- 1 x STAR Interface is available
- 12 x AFCKs are available + Addons
- 2 x FLIBs are available + Addon

Firmware Status

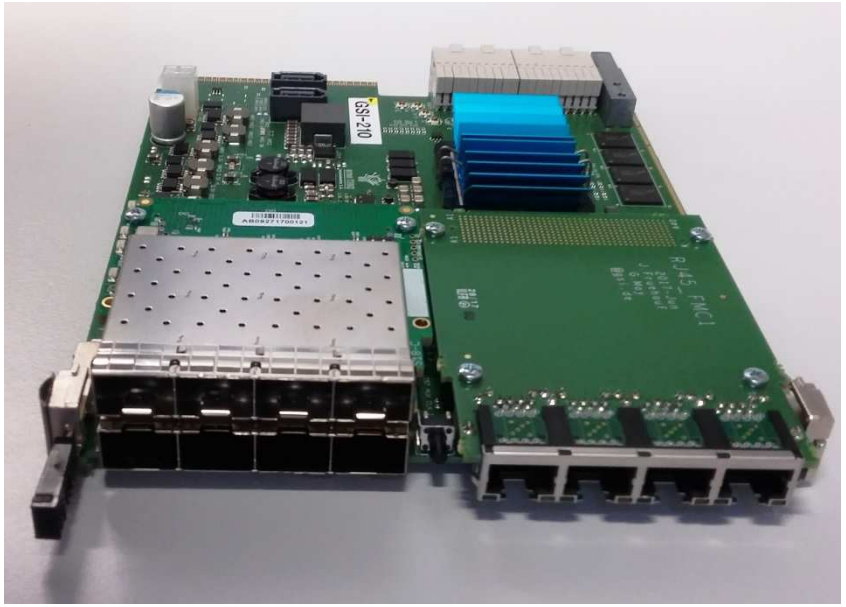

- Implemented:
  - readout of 6 GBTx (1 Sector)
  - Real Microslices
  - data pre-processing
    - merging Epochs of up to 240 GET4s
  - Token detection
  - specific Data handling for some unexpected GET4 behavior
    - lost Epoch
    - multiple of the same Epoch

Firmware Status

- open issues:
  - we see from time to time "Mismatch Errors" which indicates not all GET4 send the right Timestamp
    - further debugging needed
  - GET4 FEE runs on recovered CLK from GBTx instead of 160MHz from CLOSY
    - ➢ loss in precision
    - we do not always get a link between GET4 and GBTx in case of copper clk
    - further debugging needed
    - detailed information about CLK in separate PPT available

RMS Plot for Pulser Input

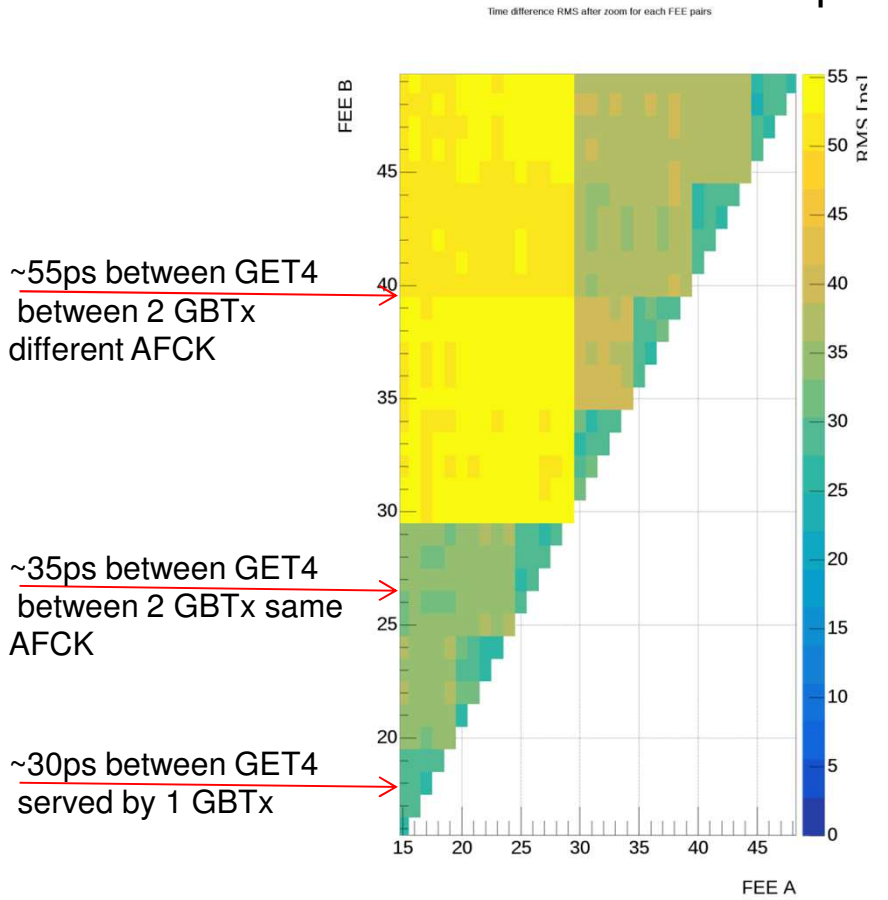

System resolution should be still below 80ps

Power Supply

- Mean Well Power Unit
  - 2x 12V / 80A (2x 110V / 13A) needed for full wheel
  - *can STAR provide 2 x power cord with IEC320-C20 connector*
  - *controlled by web interface so far*
- Power Distribution Unit for STAR will be produced in 2nd week of October
  - prototype @ mCBM already controlled via epics via raspberry pi 3

Mean Well
RKP-1UI-CMU1
RCP-2000-12

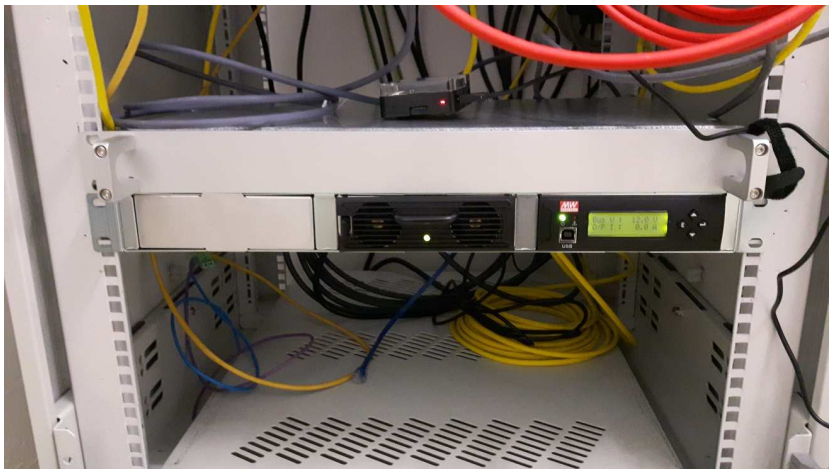

EPICs GUI

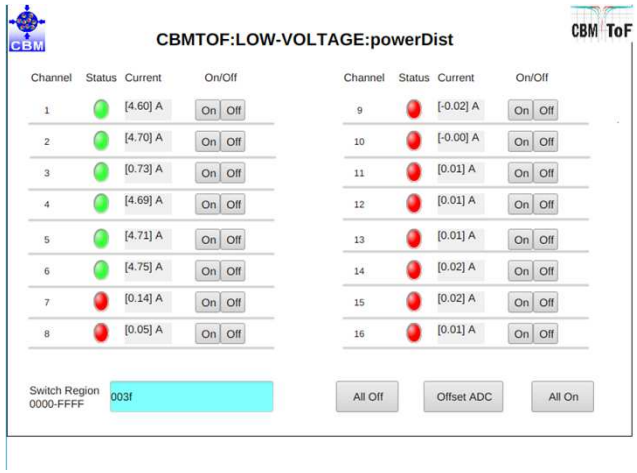

Summary & Outlook

- we produced our FEE for STAR in China
- we implemented the GBTx in our Readout Chain
- we will install the full wheel @ STAR November / December 2018
- we plan to remove JTAG-PC inside the Cave
  - either we use the raspberry or an USB to Optic converter (already bought)
- we continue debugging issues in our Firmware and Hardware

Thank you for your attention

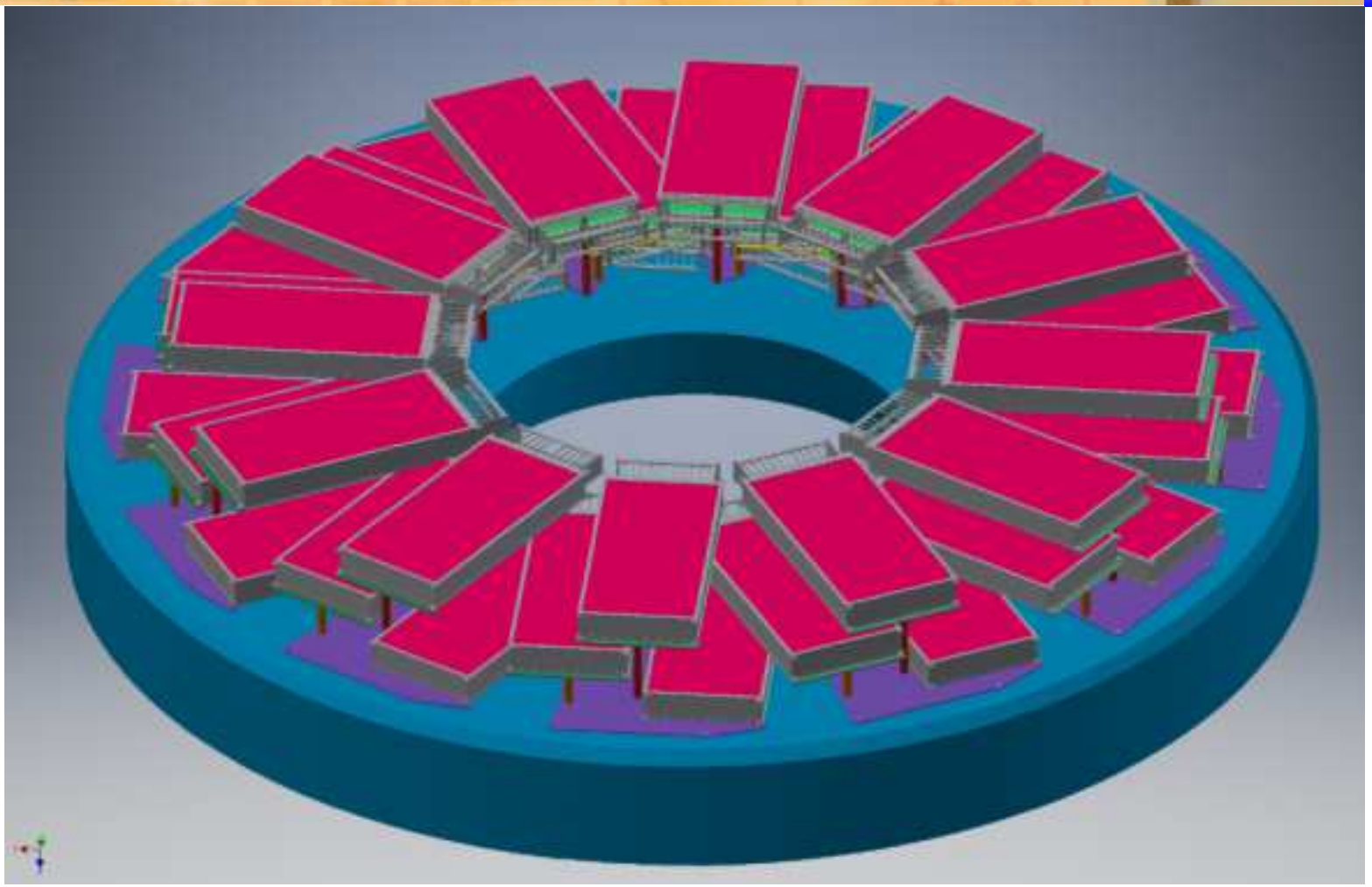

Backup

CBM ToF Readout Scheme for mCBM & STAR *(reminder)*

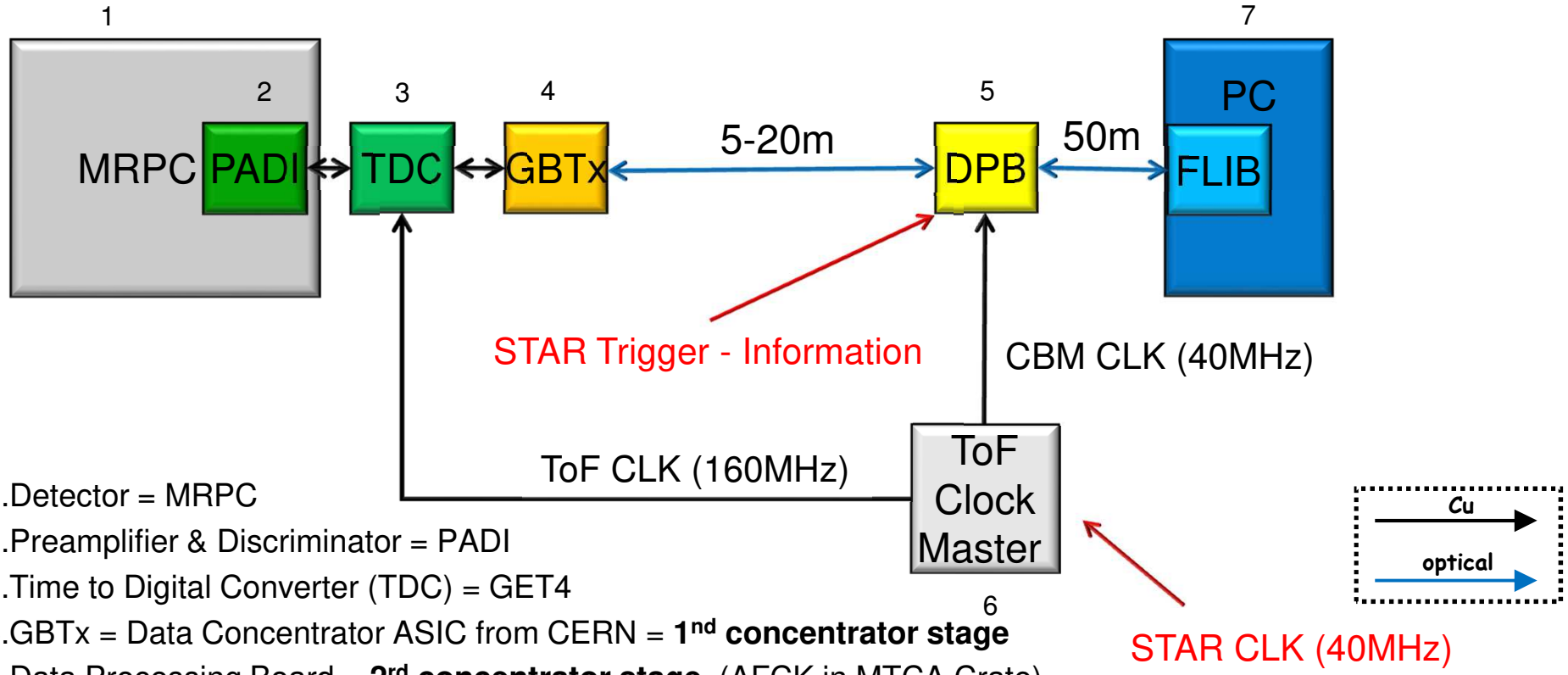

1.Detector = MRPC
2.Preamplifier & Discriminator = PADI
3.Time to Digital Converter (TDC) = GET4
4.GBTx = Data Concentrator ASIC from CERN = **1nd concentrator stage**
5.Data Processing Board = **2rd concentrator stage** (AFCK in MTCA Crate)
6.Clock Master (CLOSY) & Clock Distribution for ToF
7.PC = storage Device with FLIB (PCIe Card)

Clock and Token Detection & Signal Distribution outside the Magnet

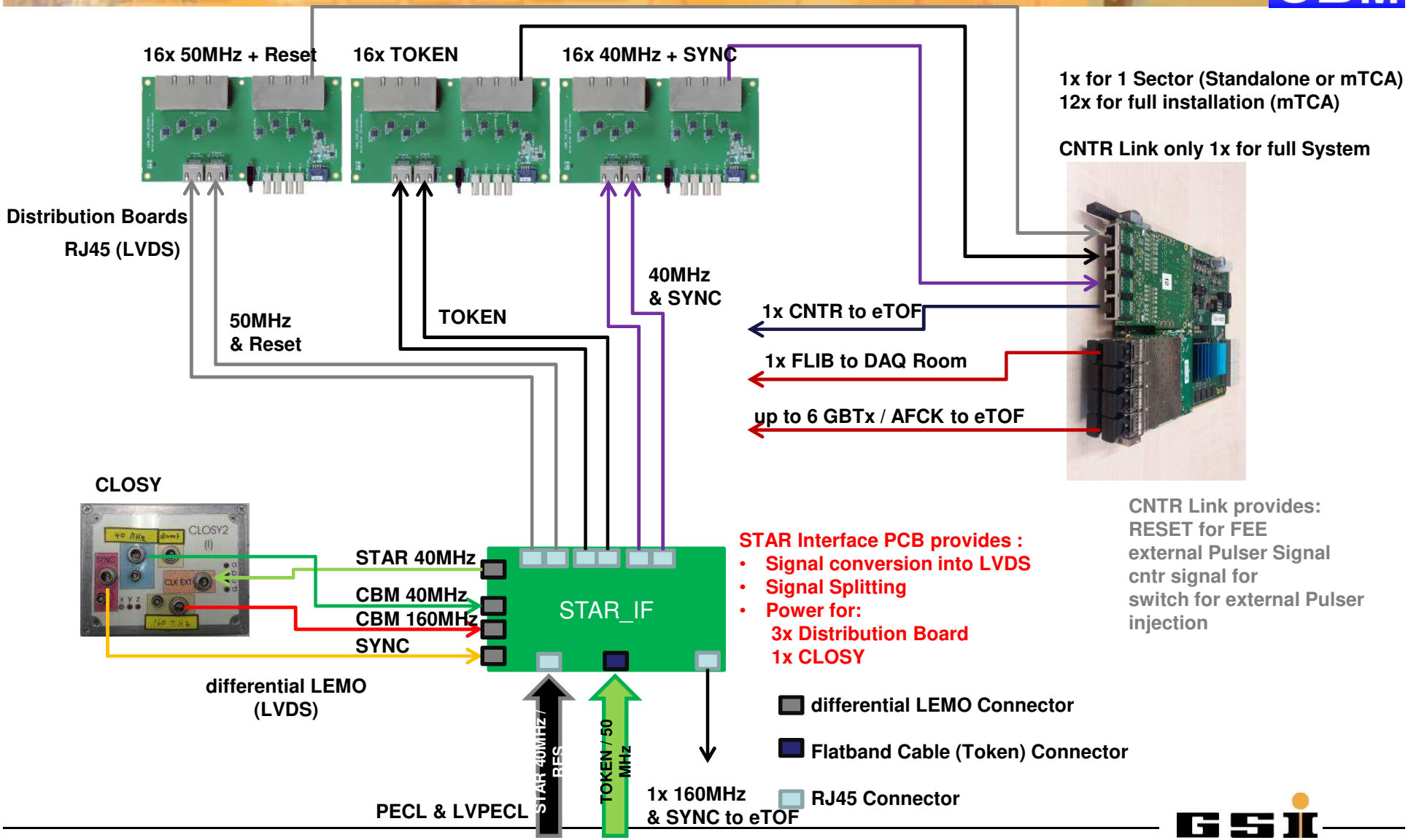

Clock / SYNC & CNTR Distribution inside the Magnet

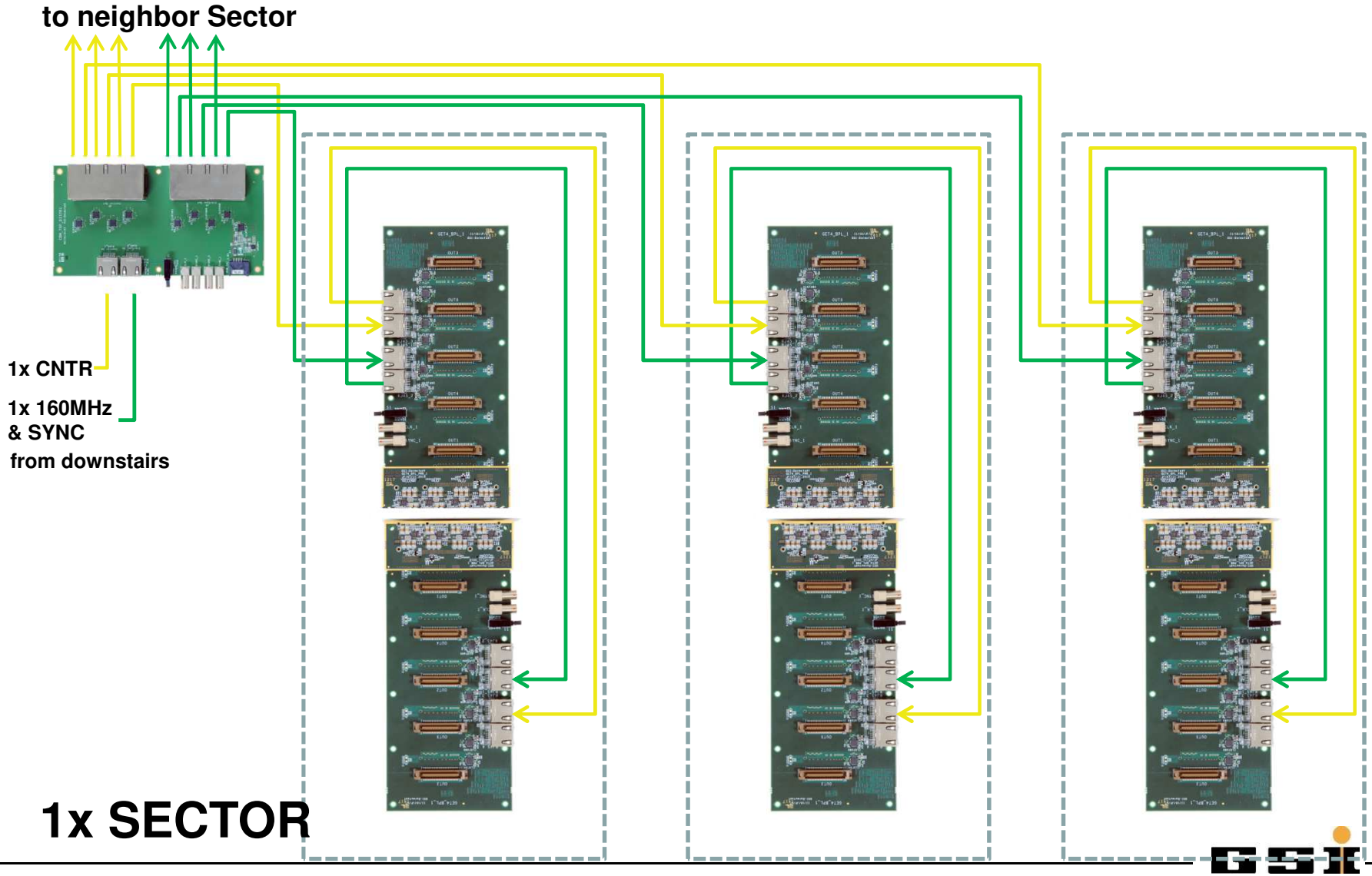

CBM ToF @ STAR

Module testing in HD ongoing

- 4 sectors under test
- 2 sectors only under GAS

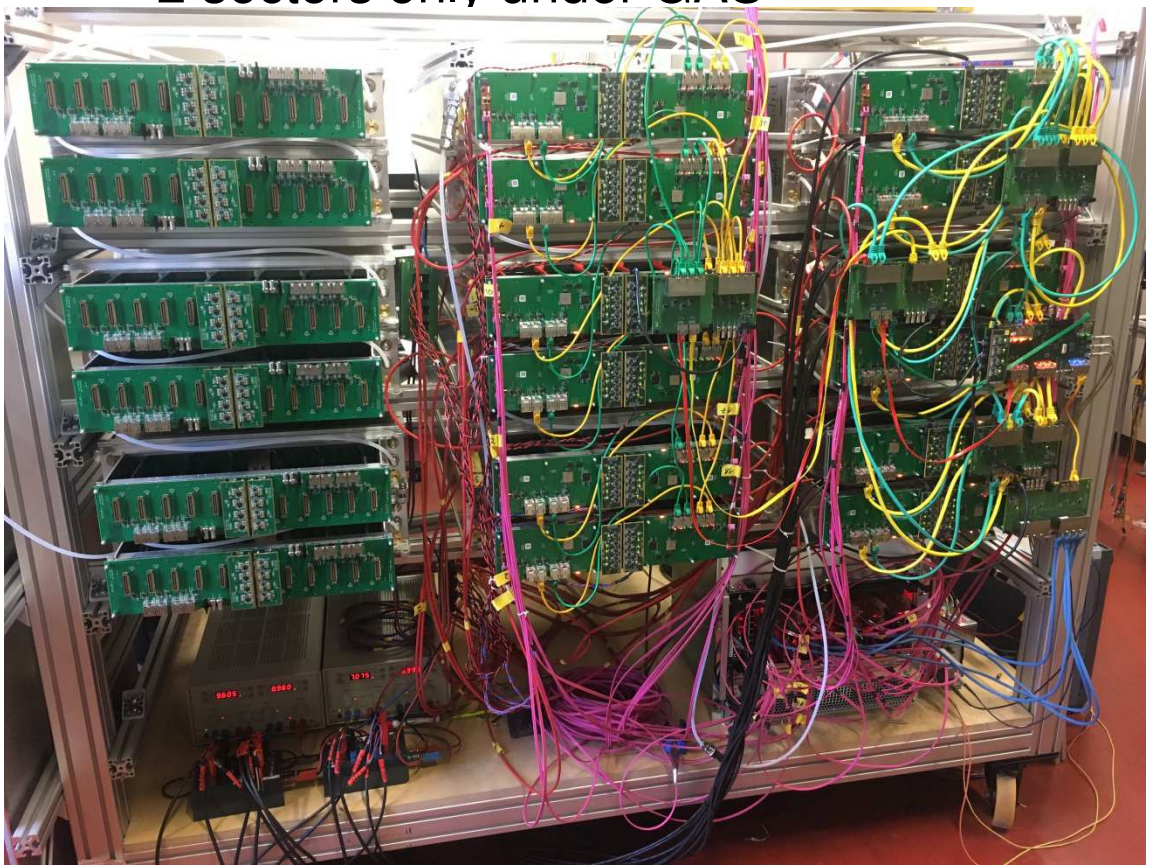

CBM ToF @ mCBM
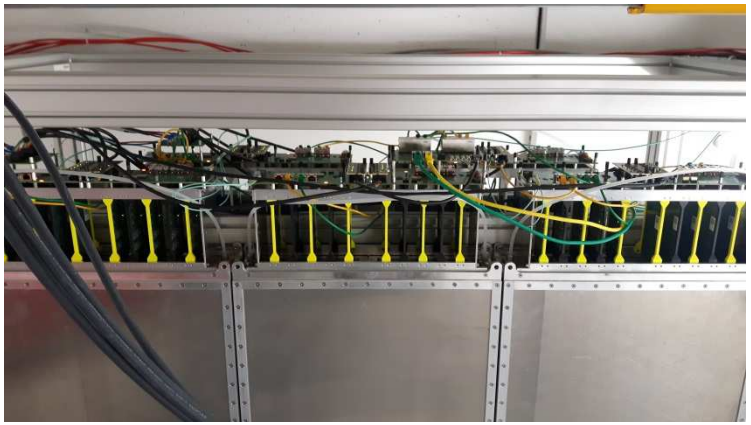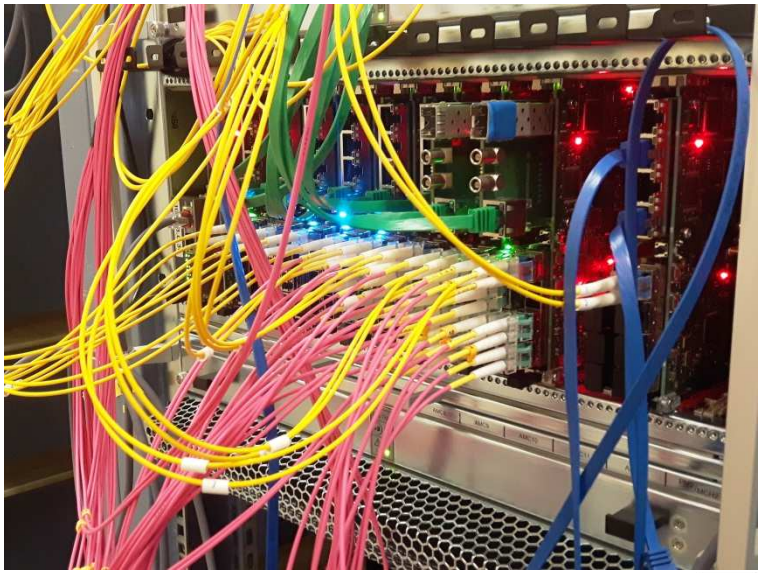
- readout 1600 Channel