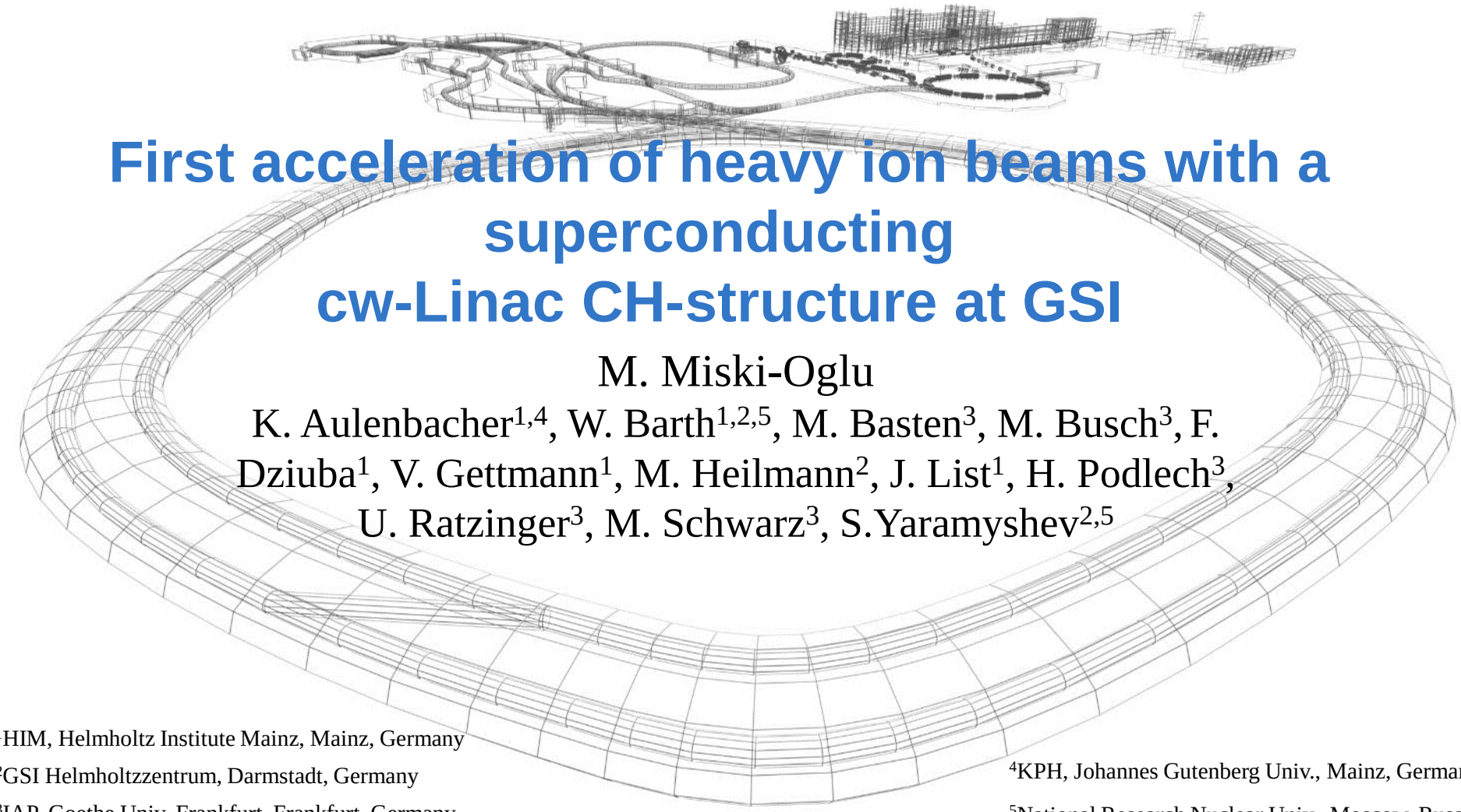

First acceleration of heavy ion beams with a superconducting cw-Linac CH-structure at GSI

M. Miski-Oglu

K. Aulenbacher[1,4], W. Barth[1,2,5], M. Basten[3], M. Busch[3], F. Dziuba[1], V. Gettmann[1], M. Heilmann[2], J. List[1], H. Podlech[3], U. Ratzinger[3], M. Schwarz[3], S.Yaramyshev[2,5]

[1]HIM, Helmholtz Institute Mainz, Mainz, Germany

[2]GSI Helmholtzzentrum, Darmstadt, Germany

[3]IAP, Goethe Univ. Frankfurt, Frankfurt, Germany

[4]KPH, Johannes Gutenberg Univ., Mainz, Germany

[5]National Research Nuclear Univ., Moscow, Russia

Requirements for FAIR and the SHE-Program

FAIR requirements:

- high beam currents
- low repetition rate (max. 3 Hz)
- low duty factor (0.1 %, pulse length for SIS18 only 100 µs)

“Super Heavy Element” requirements:

- relatively low beam currents
- high repetition rate (50 Hz)
- high duty factor (100 %, pulse length up to 20 ms)

Motivation and Main Design Parameter

- Operation mode cw
- Mass / Charge 6
- Beam current ≤1 mA
- Injection energy 1.4 MeV/u
- Output energy 3.5 - 7.3 MeV/u
- Output energy spread ±3keV/u

Production of element $^{288}_{115}$uup, $^{289}_{115}$uup, $30\ events$

(D. Rudolph, Lund Univ., PRL 111, 112502 (2013))

	GSI- Unilac	cw-Linac
Beam intensity(particle/s)	$6 \cdot 10^{12}$	$6 \cdot 10^{13}$
Beam on target	3 weeks	2 days

Current cw-Linac Layout

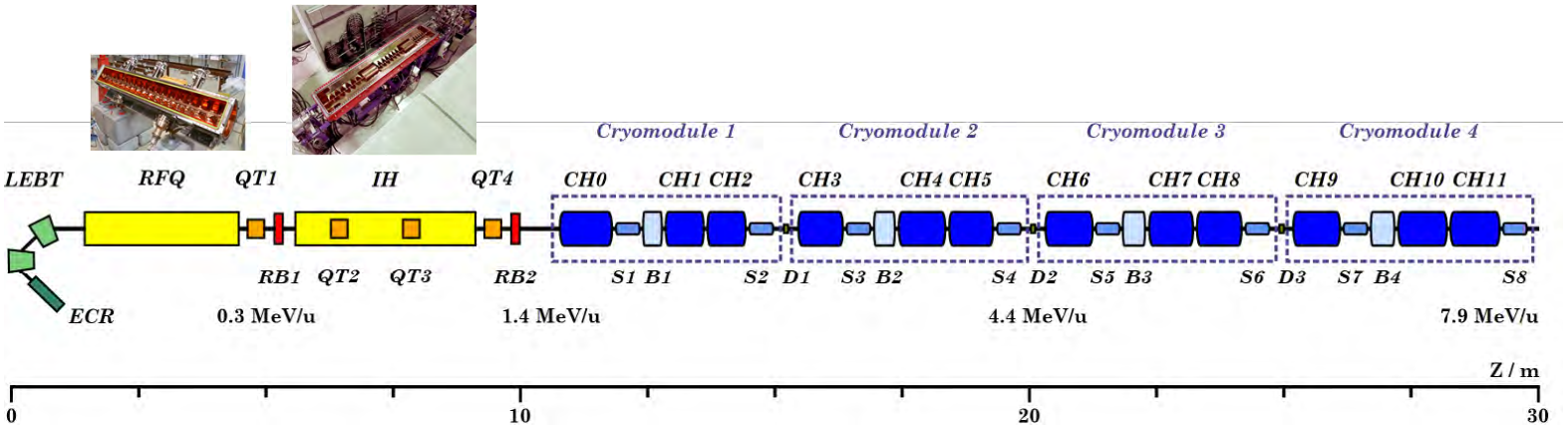

- Total of 12 CH cavities
- Each cryo module contains 3 CH cavities + 1 rebuncher + 2 solenoids
- Variable beam energy 3.6-7.5 MeV/u
- First step →Demonstrator project

Cryo Module	Cavity	Output energy (MeV/u)		
		A/Z=6	*A/Z=3*	*A/Z=1*
	HLI	*1.4*	*1.4*	*1.4*
CM1	CH0	2.1	2.2	3.0
	CH1	2.6	3.0	4.2
	CH2	2.9	3.6	4.6
CM2	CH3	3.4	4.3	5.7
	CH4	3.8	4.8	6.3
	CH5	4.2	5.5	7.7
CM3	CH6	4.7	6.2	8.6
	CH7	5.2	7.0	9.9
	CH8	5.8	7.8	10.9
CM4	CH9	6.4	8.7	12.3
	CH10	7.0	9.5	13.2
	CH11	7.6	10.5	14.6

Experimental setup of the demonstrator at GSI

Layout of demonstrator cryomodule

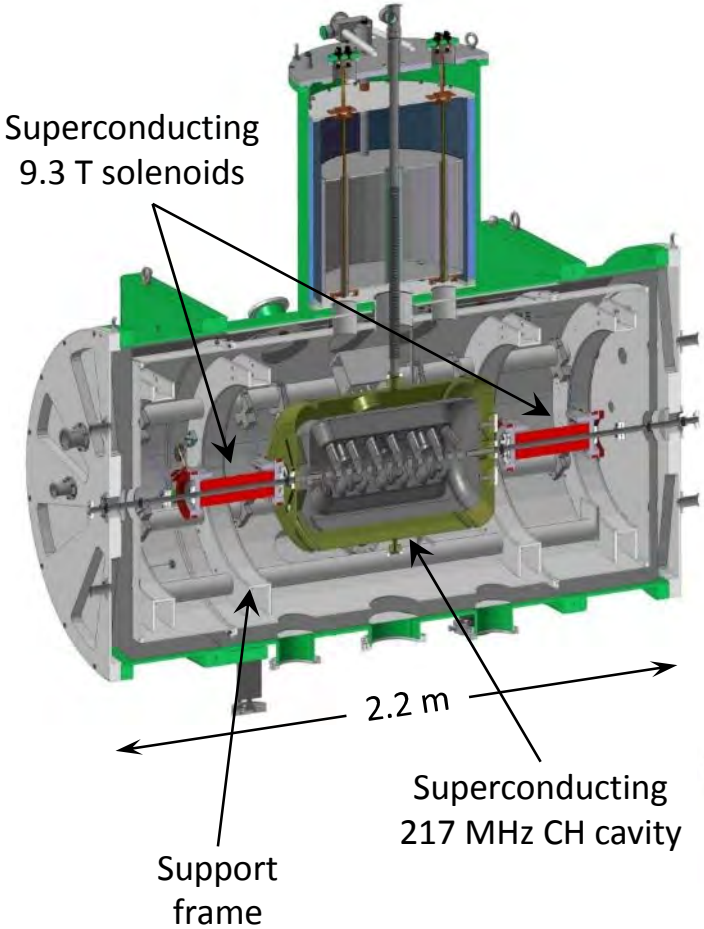

Matching line - demonstrator – test bench

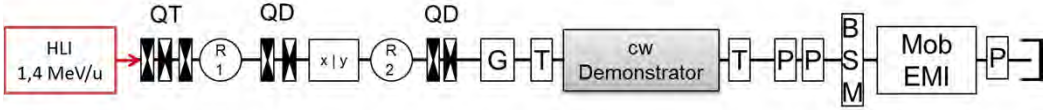

- Steering magnets
- Rebuncher
- Quadrupole doublet
- Profile grids

- Phase probes for TOF measurement
- Beam current transformers
- Bunch shape monitor (Feschenko)
- Emittance measurement

Demonstrator at GSI-High Charge State Injector (HLI)

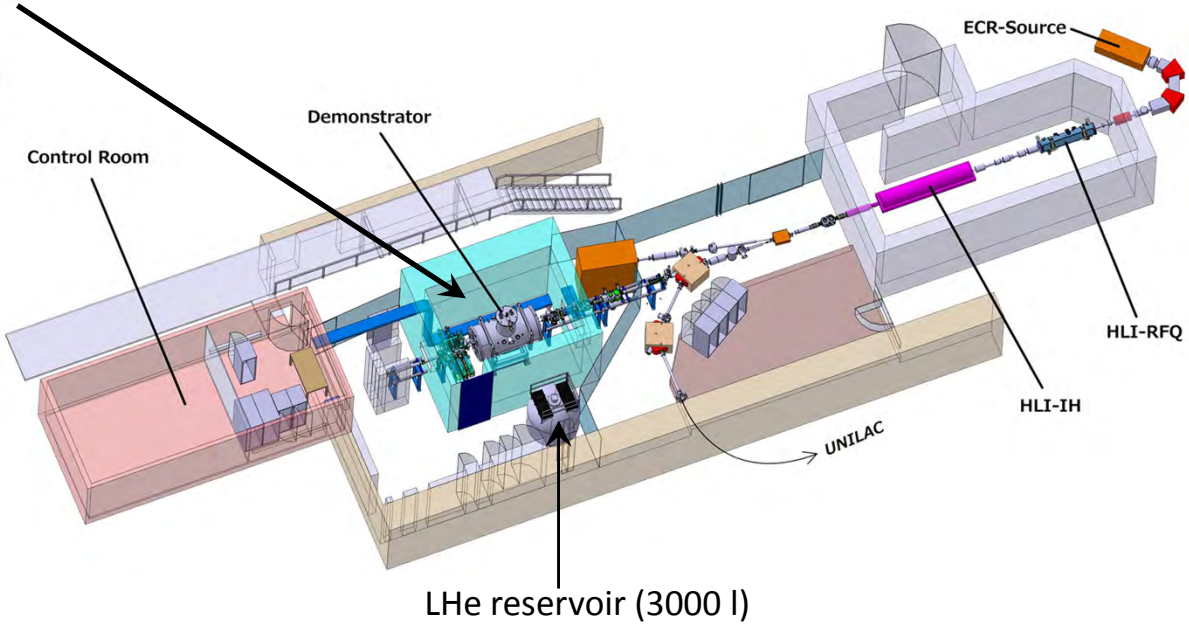

Field Profiles

E field

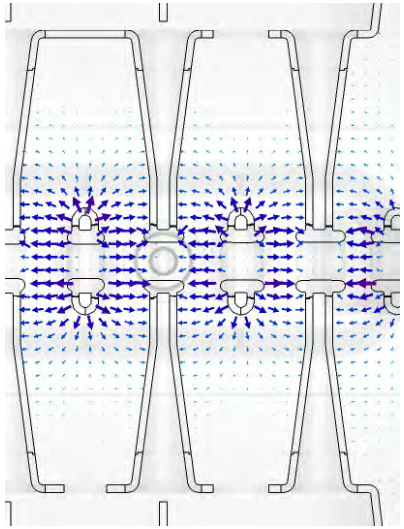

E field along beam axis

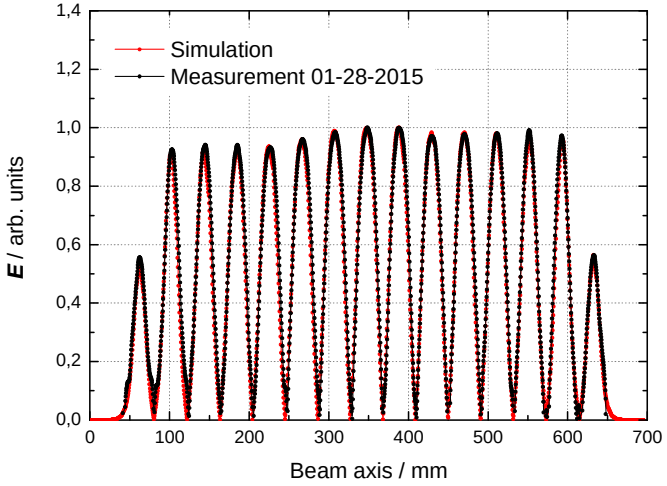

- Multigap drift tube cavity for the acceleration of protons and ions in the low and medium energy range
- Drift tubes are alternating connected to "+" and "-" potential
- **C**ross-bar-**H**-mode cavity → CH cavity

RF Design of the Demonstrator Cavity

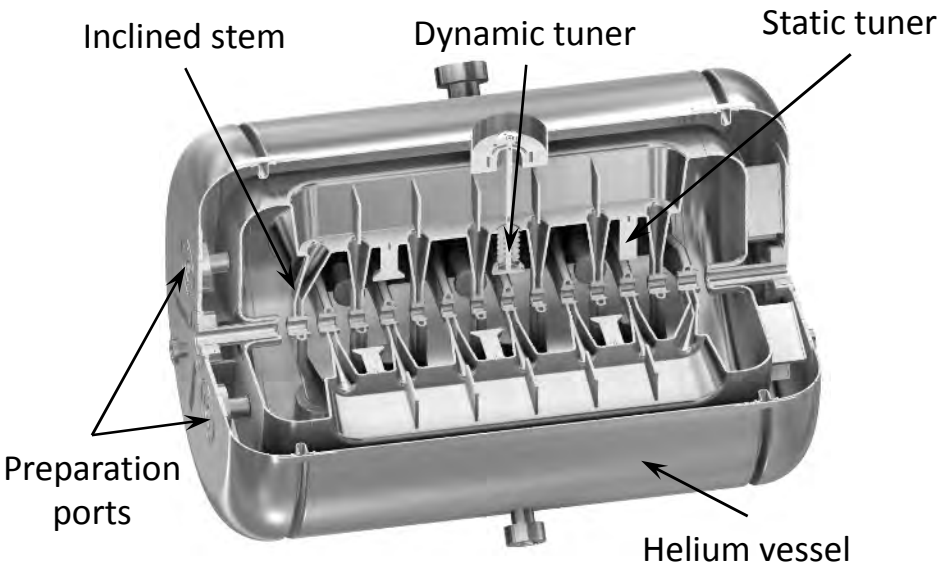

Parameters 217 MHz CH Cavity		
β		0.059
Frequency	MHz	216.816
Accelerating cells		15
Effective length ($\beta\lambda$)	mm	612
Diameter	mm	409
Tube aperture	mm	18 / 20
G	Ω	52
R_a/Q_0		3240
$R_a R_S$	$k\Omega^2$	168
E_a (design)	MV/m	5.5
E_p/E_a		6.3
B_p/E_a	mT/(MV/m)	5.7

RF Tests of the Cavity at IAP and GSI

RF test in horizontal orientation with He vessel at 4.2 K

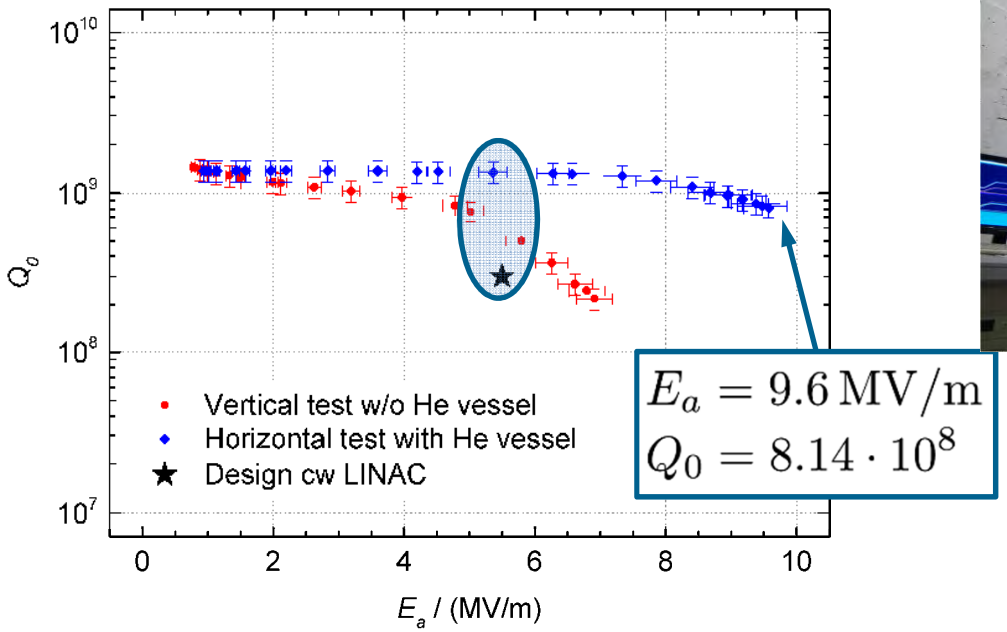

		Vertical test w/o He vessel	Horizontal test with He vessel
Q_0^{low}		$1.44 \cdot 10^9$	$1.37 \cdot 10^9$
R_S	nΩ	36	38
R_{BCS}	nΩ	15	15
R_{mag}	nΩ	9	12
R_0	nΩ	12	11
E_a	MV/m	6.9	9.6
Q_0		$2.19 \cdot 10^8$	$8.14 \cdot 10^8$
V_a	MV	4.2	5.9
E_p	MV/m	43	60
B_p	mT	39	55

- Improved performance due to an advanced HPR
- Low field emission activity
- Very high gradient
- Thermal quenching above 9.6 MV/m

Integration into Cryostat

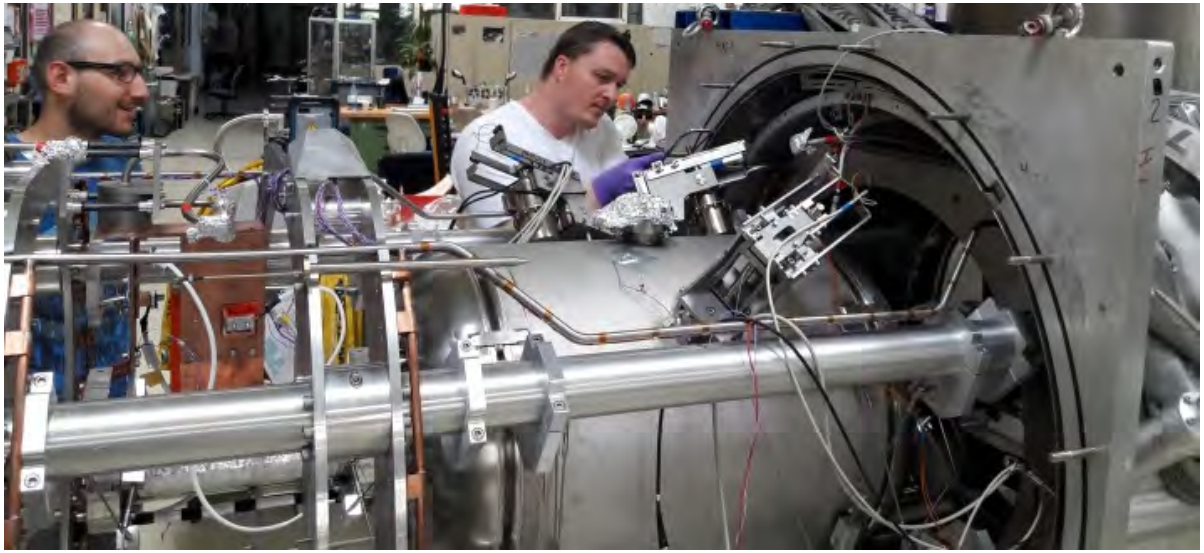

Matching Line

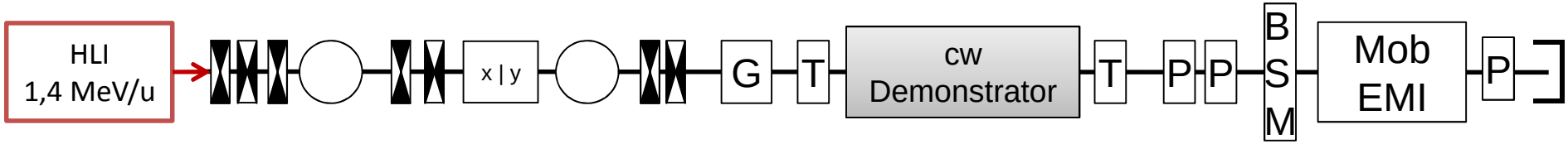

- HLI provides Ar^{11+}, Ar^{9+}, Ar^{6+}, He^{2+} @ 1,4 MeV/u
- Steering magnets
- Additional Re-Buncher
- Quadrupole doublet
- Profile Grid
- Phase probes for TOF measurement
- Beam current transformers for transmission measurement
- Bunch shape monitor (Feschenko monitor)
- Slit-Grid emittance measurement device
- Transversal matching is measured in 2015
- 6d characterization of the beam

Beam Energy vs. RF-Phase and -Amplitude

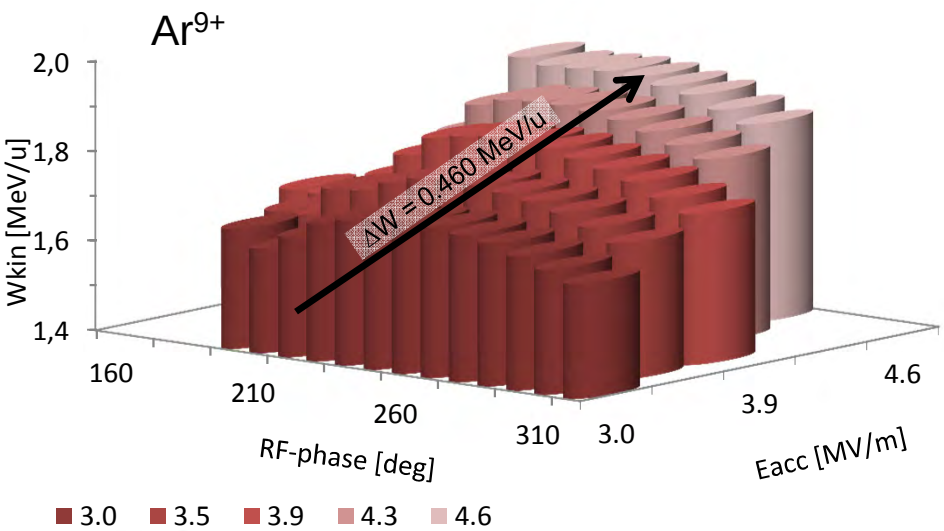

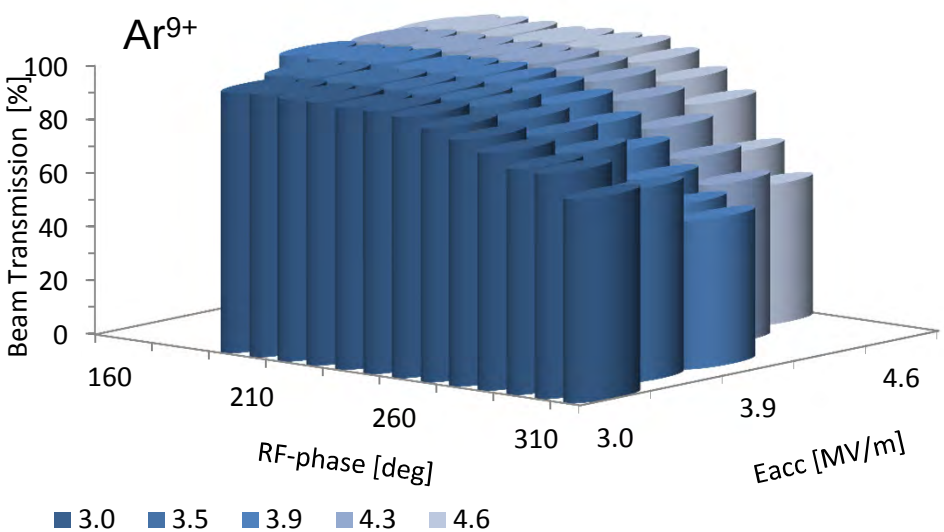

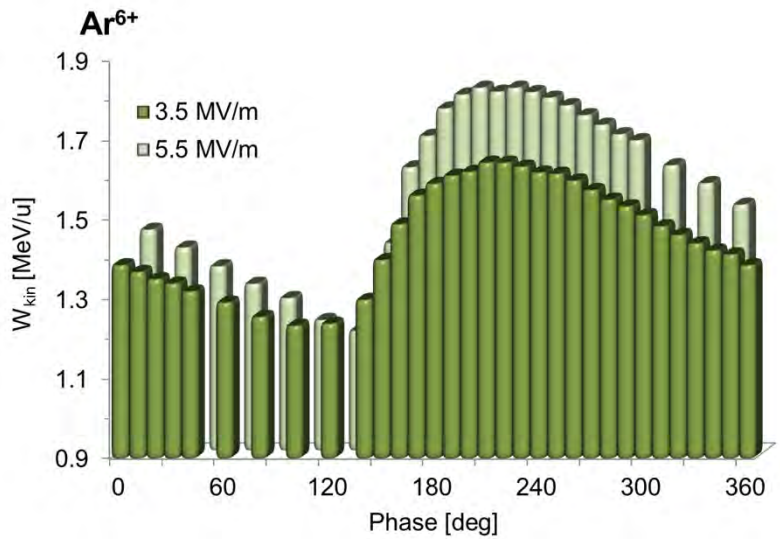

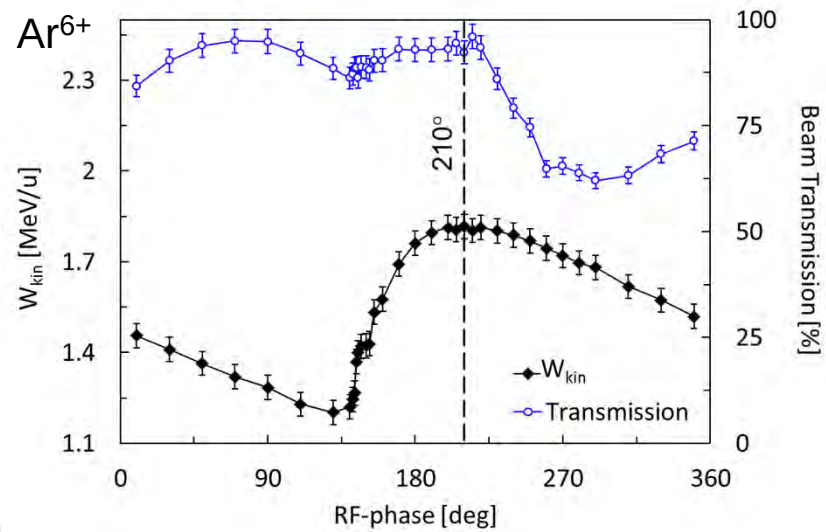

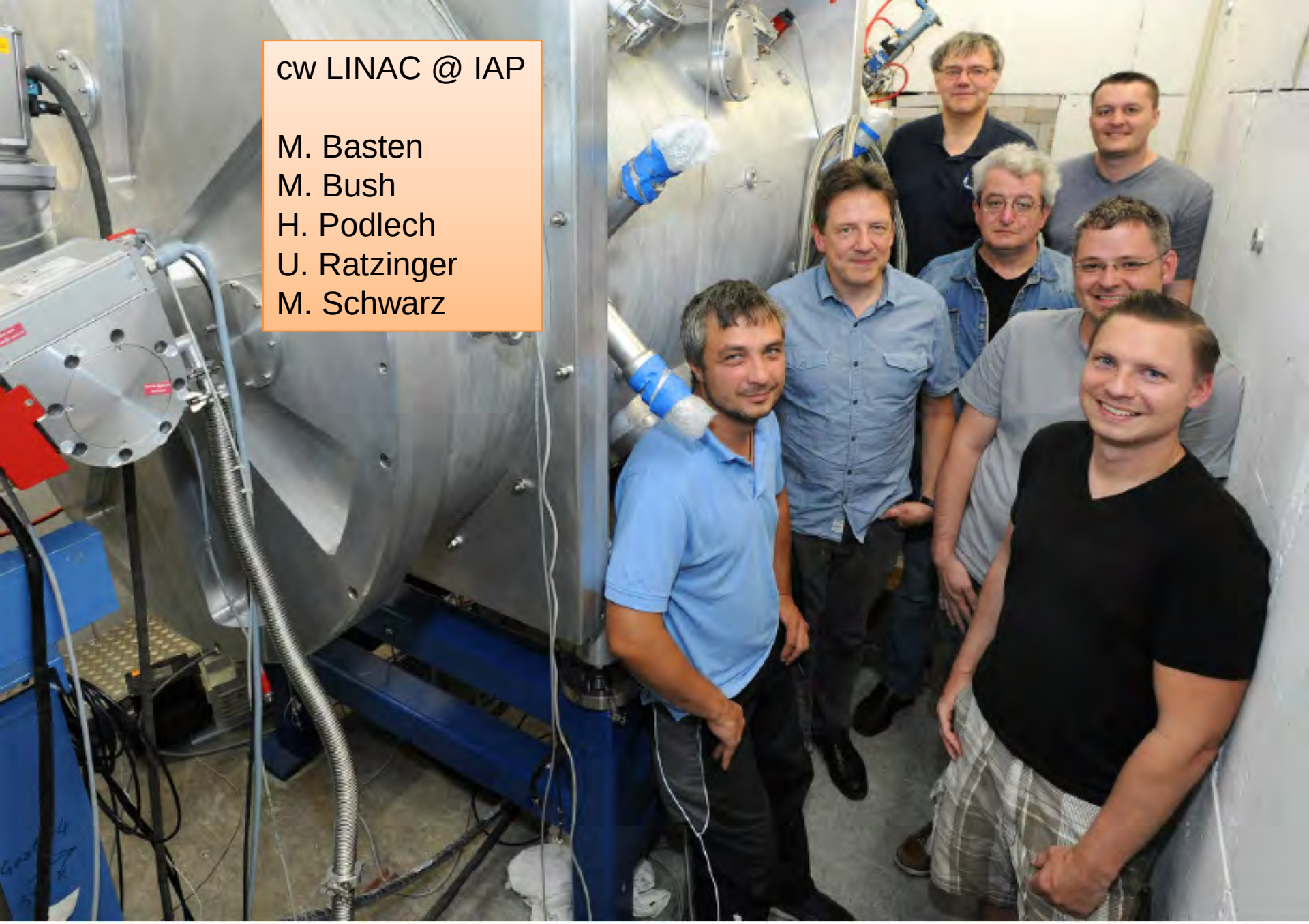
cw LINAC @ IAP
M. Basten
M. Bush
H. Podlech
U. Ratzinger
M. Schwarz

Next Phase: Adwanced Demonstartor

Standard cryomodule layout

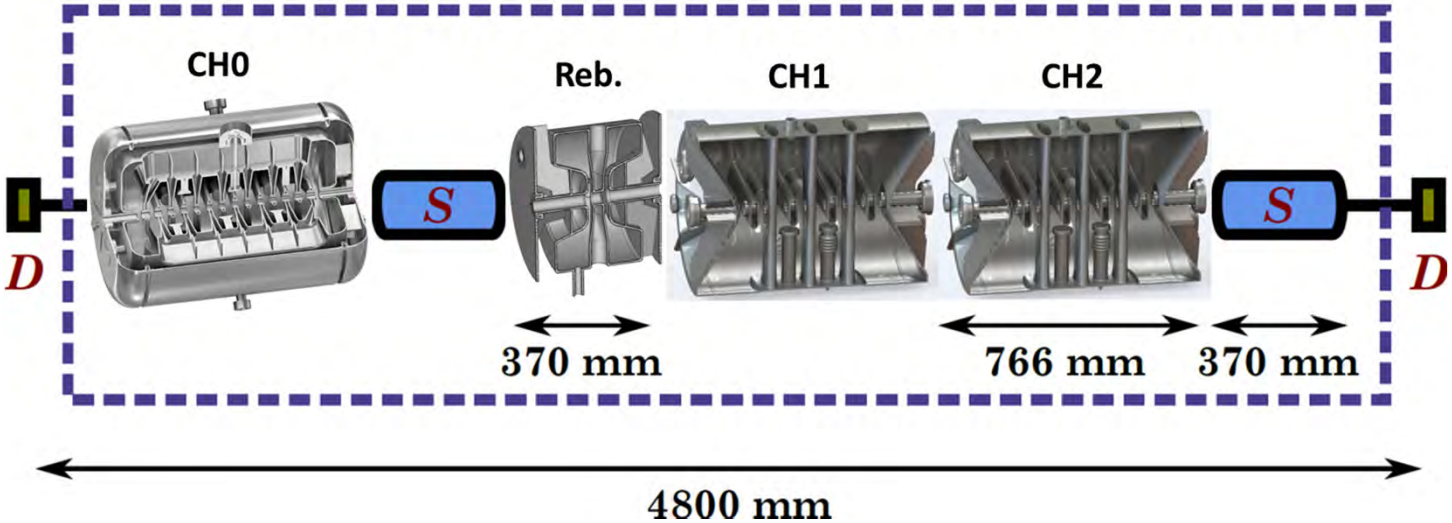

- New cryo module layout containing demonstrator CH cavity, 2 short CH cavities, 1 buncher and 2 solenoids
- Simplified cavity design (easier manufacturing & surface processing)
- CH1 & CH2 are already in production (delivery at 1th quarter of 2019)
- Tendering for cryostat at 3rd quarter of 2018
- Moderate increase of design gradient → more compact linac design or higher A/q

Tender Lot Nr.1: Cryostat

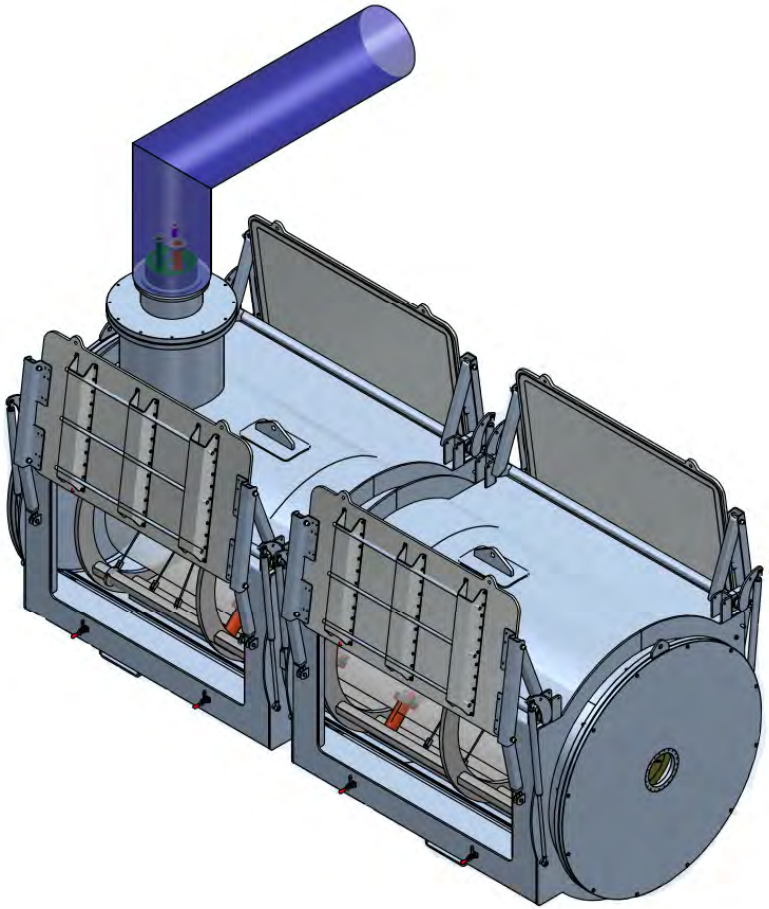

- Cryostat containing demonstrator CH cavity, 2 short CH cavities, 1 buncher and 2 solenoids
- He-supply by cryoplant
- Service doors allows for in situ alignment of each component to beam line
- Expected signing of contract in 11/2018
- Expected delivery in 04/2020
- „Dry“ assembly with dummy components+4K test
- 4K test@GSI with STF in 09/2020

Tender Lot Nr.2: Link to STF cryoplant

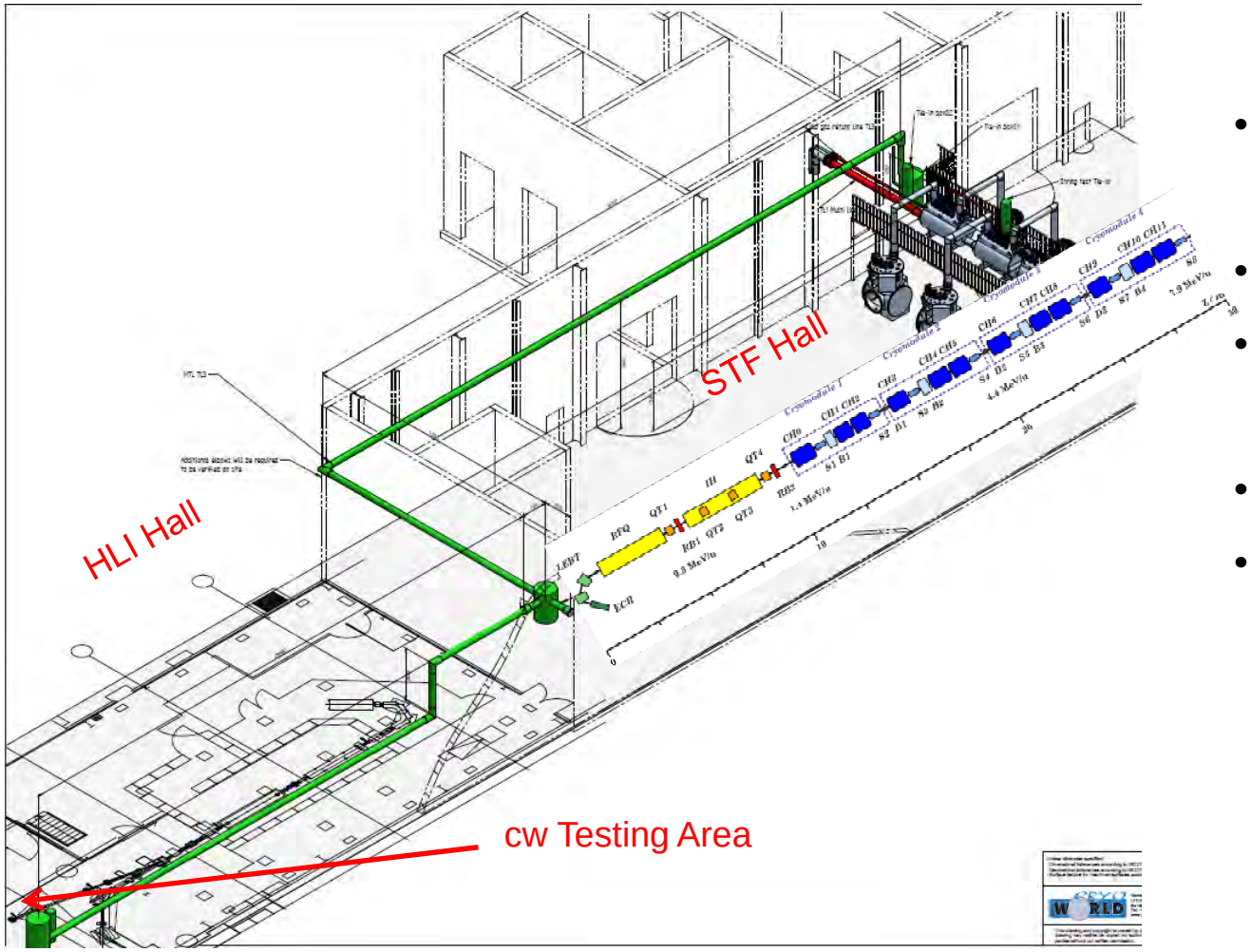

- Supply of cryostat with 4K and 40K Helium gas
- Transfer line of total 80m
- Expected signing of contract in 11/2018
- Expected delivery in 12/2019
- Suply of testing area or/and entire cw-Linac

First RF-measurement for CH1 in a vertical cryostat

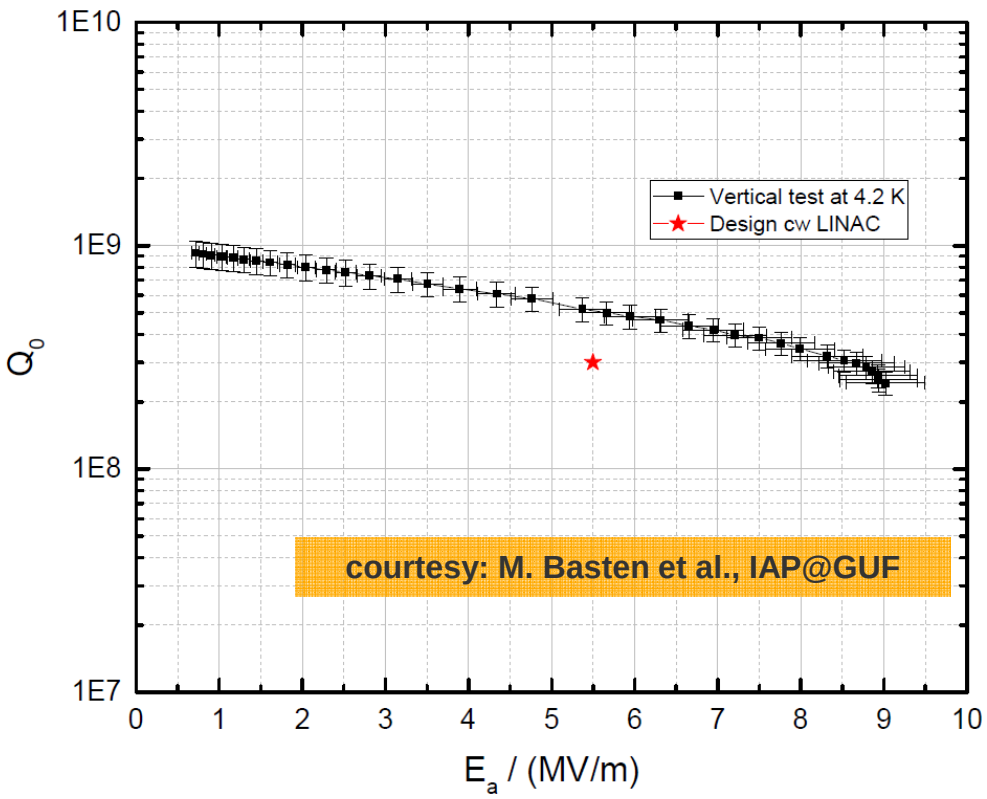

- Accelerating gradient is twice of design value
- Expected delivery of CH1/CH2 in 02/2019
- To do @HIM:
  - 4K test in horizontal cryostat
  - Integration of RF power cuplers in clean room
  - 4 K test with RF power couplers
- Integration into cryostat in 11/2020

Infrastructure @ HIM

- Clean rooms ISO6/ISO4
- RF-Bunker for testing
- RF-infrastructure:
  - 5kW RF-amplifier
  - RF control system
- He-infrastructure:
  - 3000L He-reservoire
  - Transfer lines
  - He-recovery compressor

Timeline of Advanced Demonstrator Project

02/2015	Funding of the Advanced Demonstrator within POF3
09/2016	Ordering of two short CH-cavities
11/2018	Tendering of cryostat
2/2019	Delivery of short cavities
05/2019	Modification of radiation protection shelter @GSI
12/2019	Link of testing area to STF cryoplant
04/2020	Delivery of cryostat
04/2021	Assembly of cryomodule @ HIM
06/2021	Beamtest @ GSI

Thank You for Your attention!