PANDA Lecture Week
Introduction into Front End Electronics
Part II: Noise

Holger Flemming

GSI Helmholtzzentrum für Schwerionenforschung GmbH
Experiment Electronics Department

07.06.2017

Introduction

- Random fluctuation in an electric signal
- Characteristic of all electronic circuits
- Has to be distinguished from
  - Interference
  - Distortion
- As a random process noise is characterised by stochastic properties
  - Variance
  - Distribution
  - Spectral density
- Noise contribution propagate quadratic

Introduction

Mean value of noise voltage / current vanishes

$$\overline{V_N} = 0 \tag{1}$$

So noise intensity is given by RMS value

$$v_N = \sqrt{V_N^2} \tag{2}$$

Spectral noise densities:

$$v_f^2 = \frac{dv^2}{df}\ [\mathrm{V}^2/\mathrm{Hz}] \qquad i_f^2 = \frac{di^2}{df}\ [\mathrm{A}^2/\mathrm{Hz}] \tag{3}$$

$$v_N = \sqrt{\int_{f1}^{f2} v_f^2 df} \qquad i_N = \sqrt{\int_{f1}^{f2} i_f^2 df} \tag{4}$$

Noise Sources

Thermal Noise

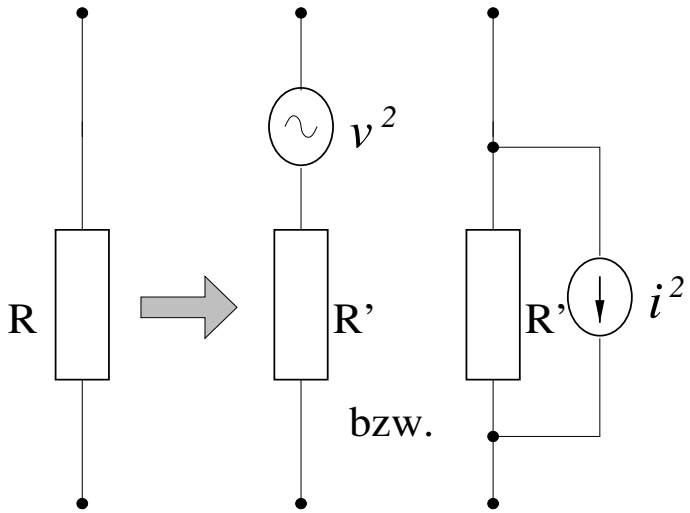

Real resistor split into ideal resistor and noise source

- Charge carrier in thermal equilibrium with lattice ⇒Thermal noise
- Linear dependence on temperature
- Independent of frequency (white noise)

$$i^2_{f(therm)} = \frac{4kT}{R} \quad (5)$$

$$u^2_{f(therm)} = 4kTR \quad (6)$$

with Boltzmann constant k

Noise Sources

Thermal Noise

For MOS-Transistor: Noise contribution of Resistor along channel has to be integrated. For detailed discussion of MOS noise modelling literature is referred, e.g. [Jordan and Jordan, 1965, Tedja et al., 1994, Enz et al., 1995, Asgaran et al., 2004]

Noise Sources

Thermal Noise

MOS-Transistor noise depends on operational mode

1. Linear region

$$i^2_{f(therm)} = 4kTg_m \tag{7}$$

2. Saturation

$$i^2_{f(therm)} = 4kT\frac{2}{3}g_m \tag{8}$$

3. Weak inversion

$$i^2_{f(therm)} = 2qI_{DS} = 2kTg_m \tag{9}$$

When $V_{DS} \gg kT/q$

Noise Sources

$1/f$ Noise

- Additional noise contribution in electronics components observable
  - Spectral noise density $\sim 1/f$
  - Origin not completely understood
  - Intensity dependent on type of component

$$i^2_{f(1/f)} = \frac{K_f g_m^2}{C_{ox}^2 WL} \frac{1}{f} \tag{10}$$

Empirical values for K_f [Chang and Sansen, 1991]:

pJFET	$K_f \approx 10^{-33}\ \mathrm{C}^2/\mathrm{cm}^2$
pMOS	$K_f \approx 10^{-32}\ \mathrm{C}^2/\mathrm{cm}^2$
nMOS	$K_f \approx 4 \cdot 10^{-31}\ \mathrm{C}^2/\mathrm{cm}^2$

Noise Sources

Shot Noise

- Originates from potential steps like PN junctions in semiconductors
- Relates to charge quantisation
- statistical process of quantised charges conquering the potential step

$$i^2_{f(shot)} = 2I_0 q \tag{11}$$

Noise Sources

MOS Transistor Small Signal Noise Model

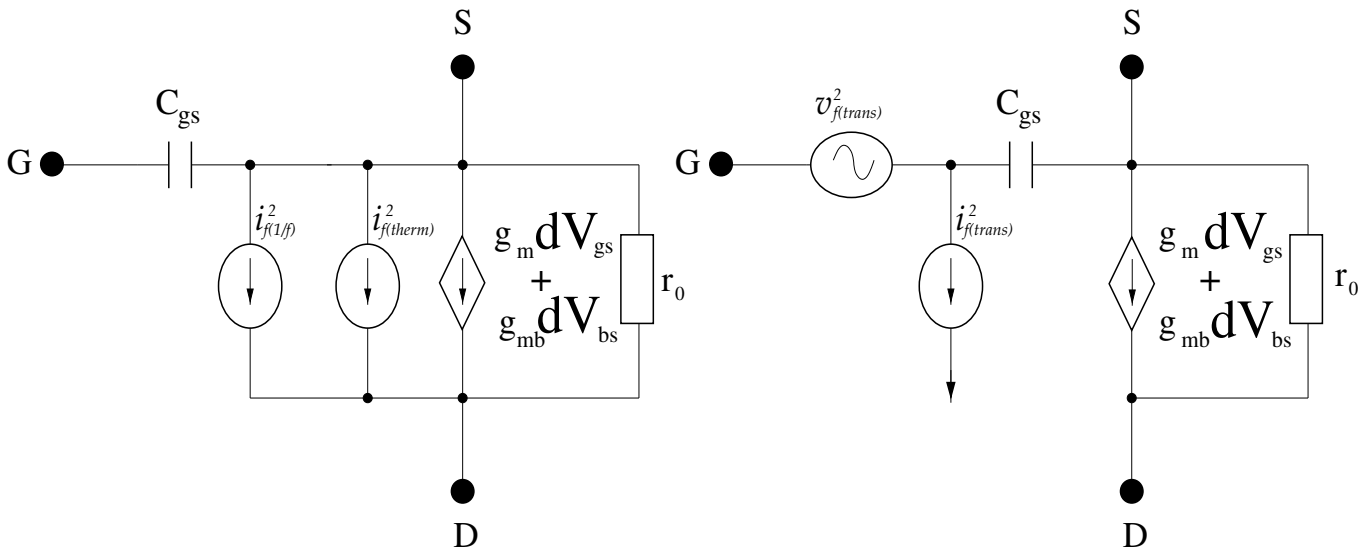

[Wieczorek, 2008]

Noise Sources

MOS Transistor Small Signal Noise Model

Imaginary noise voltage source at gate:

1. Linear region

$$v_{f(trans)}^2 = \frac{K_f}{C_{ox}^2 WL}\frac{1}{f} + 4kT\frac{1}{g_m} \tag{12}$$

2. Saturation

$$v_{f(trans)}^2 = \frac{K_f}{C_{ox}^2 WL}\frac{1}{f} + \frac{8}{3}kT\frac{1}{g_m} \tag{13}$$

3. Weak inversion

$$v_{f(trans)}^2 = \frac{K_f}{C_{ox}^2 WL}\frac{1}{f} + 2kT\frac{1}{g_m} \tag{14}$$

Noise Sources

Overview

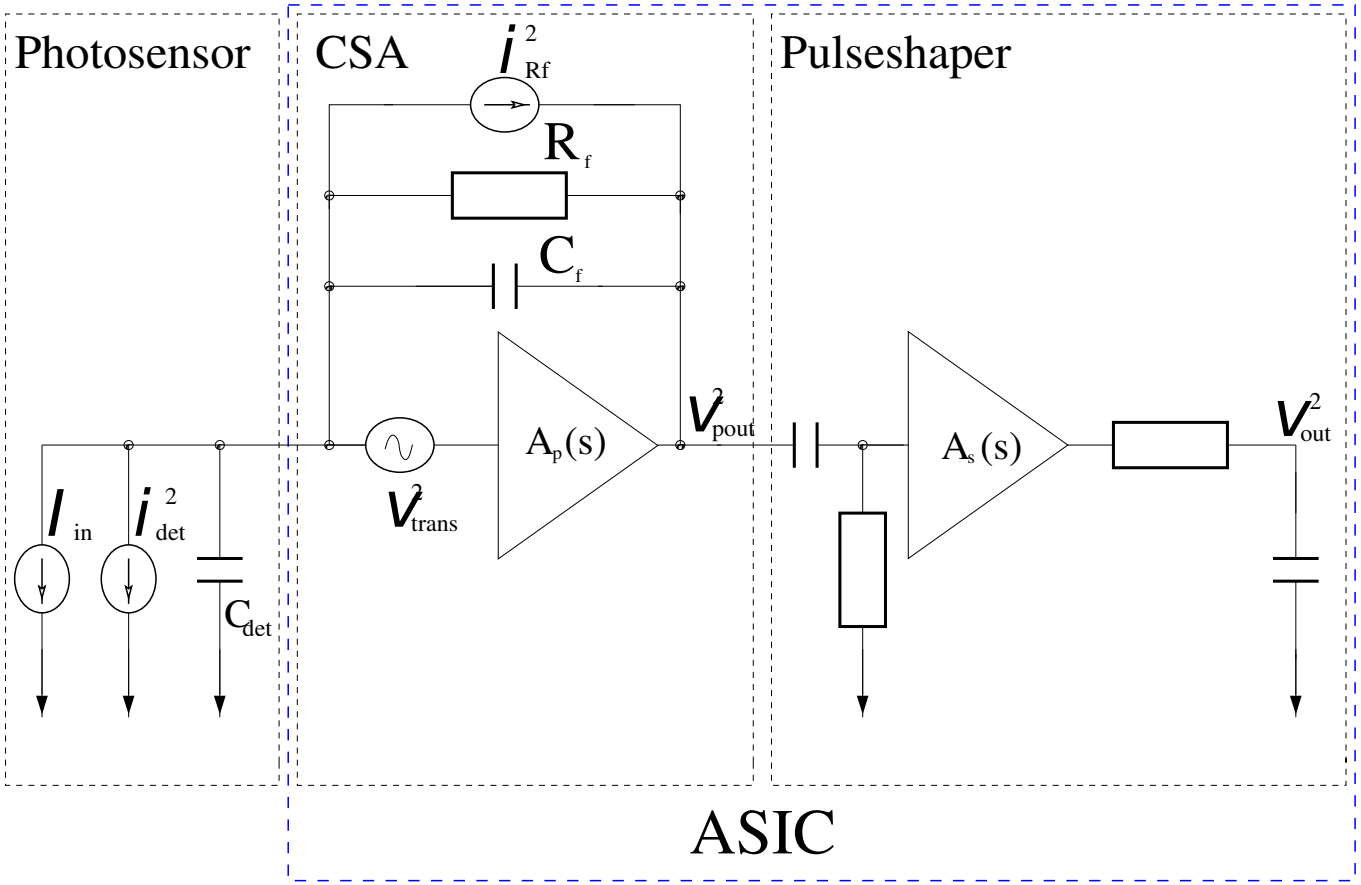

[Wieczorek, 2008]

Noise of a Charge Sensitive Amplifier

Overview

- Noise sources in charge sensitive preamplifier
  - Thermal noise of input transistor
  - $1/f$ noise of input transistor
  - Thermal noise of feedback resistor
  - Shot noise of detector
- Parameter influencing the Noise
  - Detector capacitance
  - Feedback resistor
  - Feedback capacitance
  - Transfer function of Shaper
- Leads to noise voltage at preamplifier and shaper output
- FOM: input charge that corresponds to output noise voltage

$$\Rightarrow \text{Equivalent noise charge ENC}$$

Noise of a Charge Sensitive Amplifier

Charge Amplification

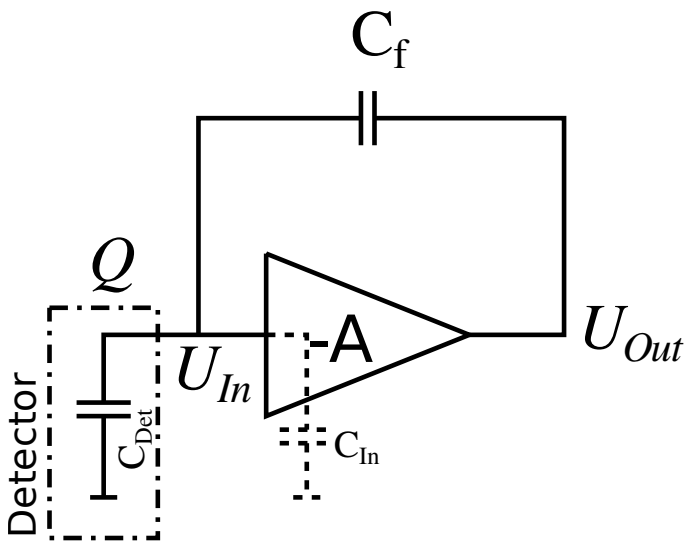

$$U_{Out} = -AU_{In} \quad (15)$$

$$Q = Q_{C_T} + Q_{C_f} \quad (16)$$

$$C_T = C_{Det} + C_{In} \quad (17)$$

$$U_{In} = \frac{Q_{C_T}}{C_T} \quad (18)$$

$$U_{Out} = U_{In} + \frac{Q_f}{C_f} \quad (19)$$

Noise of a Charge Sensitive Amplifier

Charge Amplification

$$
\begin{aligned}
U_{Out} &= -\frac{U_{Out}}{A} + \frac{Q - Q_{C_T}}{C_f} \\
U_{Out} + \frac{U_{Out}}{A} &= \frac{1}{C_f}\left(Q - U_{In} C_T\right) \\
U_{Out} + \frac{U_{Out}}{A} &= \frac{Q}{C_f} - \frac{C_T}{C_f}\frac{U_{Out}}{A} \\
U_{Out}\left(1 + \frac{1}{A} + \frac{C_T}{C_f}\frac{1}{A}\right) &= \frac{Q}{C_f}
\end{aligned}
$$

$$
U_{Out} = \frac{1}{1 + \frac{1}{A} + \frac{1}{A}\frac{C_T}{C_f}}\frac{Q}{C_f} \tag{20}
$$

Noise of a Charge Sensitive Amplifier

Charge Amplification

$A \gg 1 \wedge A \gg C_T/C_f$:

$$U_{Out} \approx \frac{Q}{C_f} \tag{21}$$

$$U_{In} \approx 0 \tag{22}$$

$$Q_{C_T} \approx 0 \tag{23}$$

Example PANDA-EMC:

$$\begin{aligned} Q_{max} &= 6\ \text{pC} \\ C_f &= 8\ \text{pF} \\ C_{Det} &\approx 240\ \text{pF} \\ \Rightarrow A &\gg 30 \end{aligned}$$

Noise of a Charge Sensitive Amplifier

Parallel Noise Sources

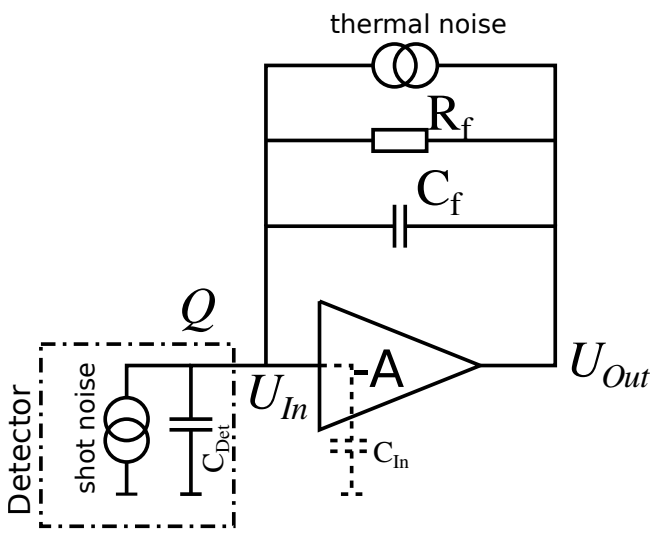

- Detector shot noise (eq. 11):

$$i^2_{f(Det)} = 2I_0 q$$

- Feedback resistor thermal noise (eq. 5):

$$i^2_{f(Rf)} = \frac{4kT}{R}$$

- Eq. 22:

$$U_{In} = 0$$

- Complex impedance of feedback capacitor:

$$X_C = \frac{1}{i\omega C_f} \qquad (24)$$

Noise of a Charge Sensitive Amplifier

Parallel Noise Sources

Noise voltage at CSA output due to parallel noise sources:

$$v_{f(par)}^2(s) = \left(2I_0 q + \frac{4kT}{R_f}\right) \frac{1}{(i\omega C_f)^2} \tag{25}$$

Noise of a Charge Sensitive Amplifier

Serial Noise Sources

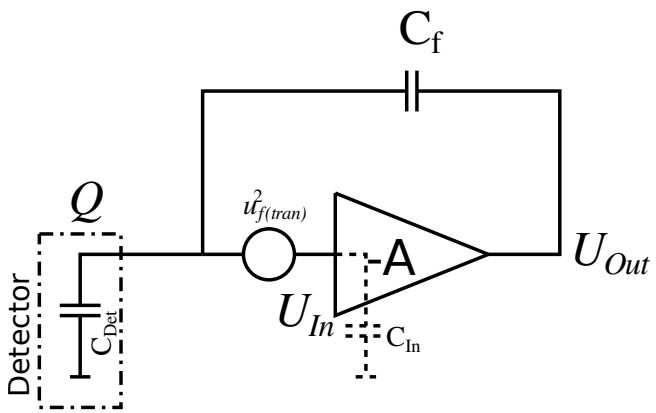

- Transistor noise (eq 14):

$$v^2_{f(trans)} = \frac{K_f}{C^2_{ox} WL} \frac{1}{f} + 2kT \frac{1}{g_m}$$

- Eq. 22:

$$U_{In} = 0$$

Noise of a Charge Sensitive Amplifier

Parallel and Serial Noise Sources

Noise voltage at CSA output due to serial noise sources:

$$v^2_{f(ser)}(s) = \left(\frac{C_T}{C_f}\right)^2 \left(\frac{K_f}{C^2_{ox} WL}\frac{1}{f} + 2kT\frac{1}{g_m}\right) \tag{26}$$

Total noise density at amplifier output:

$$v^2_{f(pout)}(s) = v^2_{f(par)}(s) + v^2_{f(ser)}(s) \tag{27}$$

$$v^2_{f(pout)}(s) = \left(2I_0 q + \frac{4kT}{R_f}\right)\frac{1}{(i\omega C_f)^2} + \tag{28}$$

$$\left(\frac{C_T}{C_f}\right)^2 \left(\frac{K_f}{C^2_{ox} WL}\frac{1}{f} + 2kT\frac{1}{g_m}\right) \tag{29}$$

Noise Sources

Overview

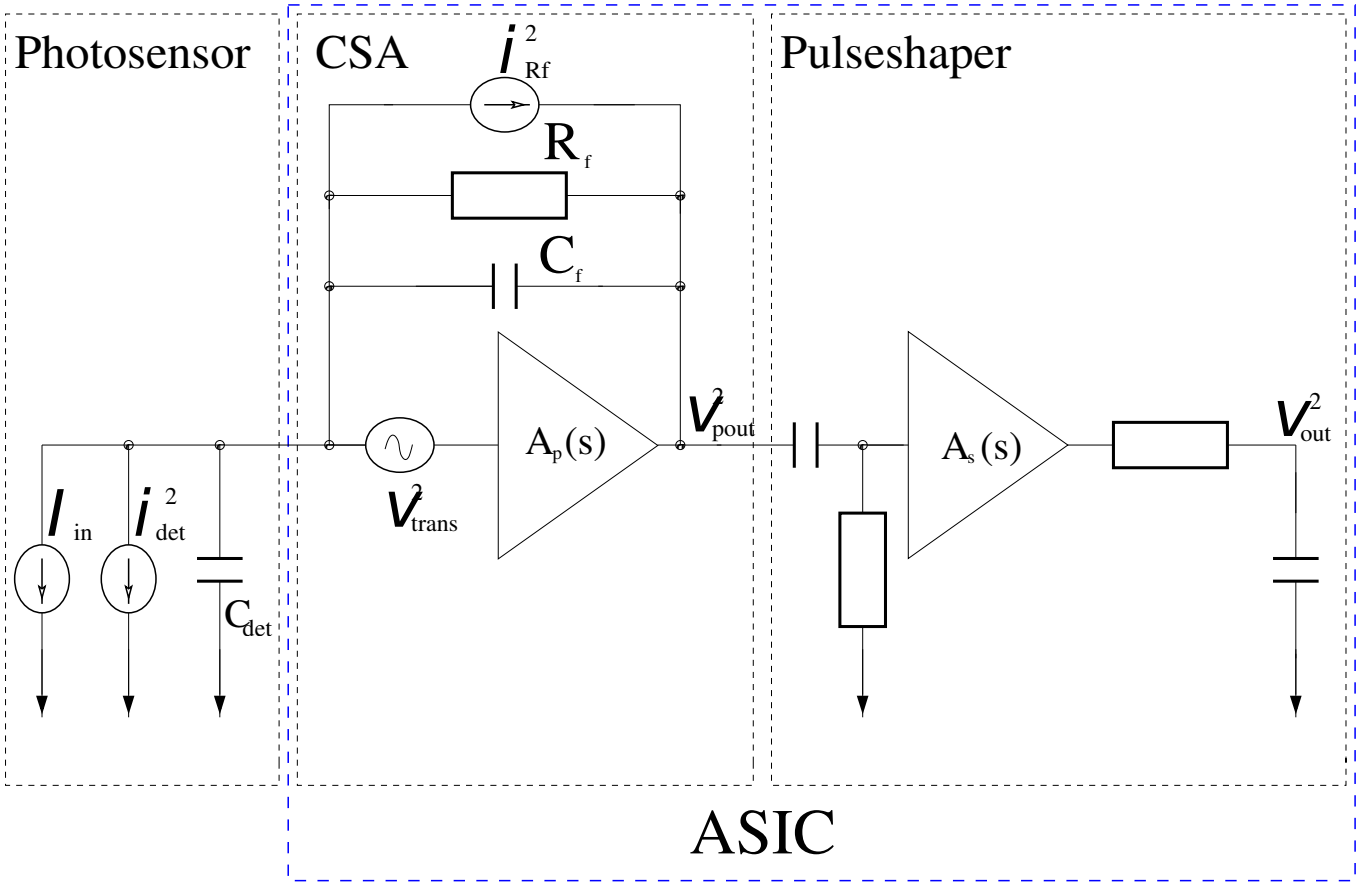

[Wieczorek, 2008]

Noise of a Charge Sensitive Amplifier

Transfer Function of Pulse Shaper

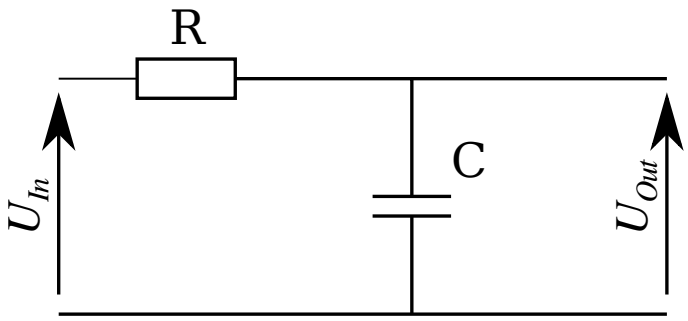

Complex Impedance of Capacitor:

$$X_C = \frac{1}{i\omega C} \tag{30}$$

Transfer function of RC-circuit:

$$U_{Out} = U_{In} \frac{\frac{1}{i\omega C}}{R + \frac{1}{i\omega C}} \tag{31}$$

Expand with $i\omega C$ and substitute $RC = \tau_0$ and $s = \sigma + i\omega \Rightarrow$

$$H_{RC}(s) = \frac{U_{Out}}{U_{In}} = \frac{1}{1 + s\tau_0} \tag{32}$$

Noise of a Charge Sensitive Amplifier

Transfer Function of Pulse Shaper

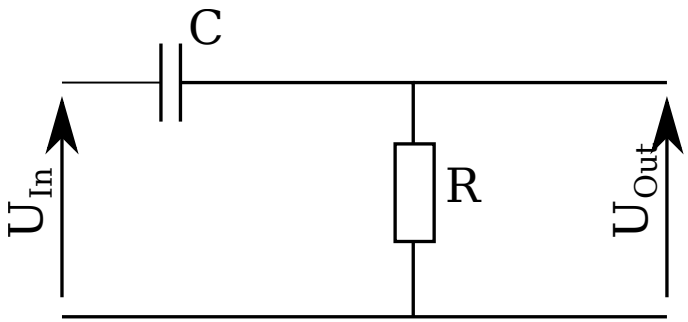

Transfer function of CR-circuit:

$$U_{Out} = U_{In} \frac{R}{R + \frac{1}{i\omega C}} \tag{33}$$

According to RC circuit:

$$H_{CR}(s) = \frac{U_{Out}}{U_{In}} = \frac{s\tau_0}{1 + s\tau_0} \tag{34}$$

Noise of a Charge Sensitive Amplifier

Transfer Function of Pulse Shaper

Transfer function of a $CR - RC^n$ shaper with one differentiator and n integrator stages:

$$H(s) = \left(\frac{s\tau_0}{1 + s\tau_0}\right)\left(\frac{A}{1 + s\tau_0}\right)^n \tag{35}$$

For the output voltage $V_{Out} = H(s)V_{In}$ with $V_{In} = V_{POut}$ the CSA output according to eq. 21 one gets

$$V_{Out}(s) = \left(\frac{s\tau_0}{1 + s\tau_0}\right)\left(\frac{A}{1 + s\tau_0}\right)^n \frac{Q}{sC_f} \tag{36}$$

Noise of a Charge Sensitive Amplifier

Preamplifier and Shaper Output Spectrum

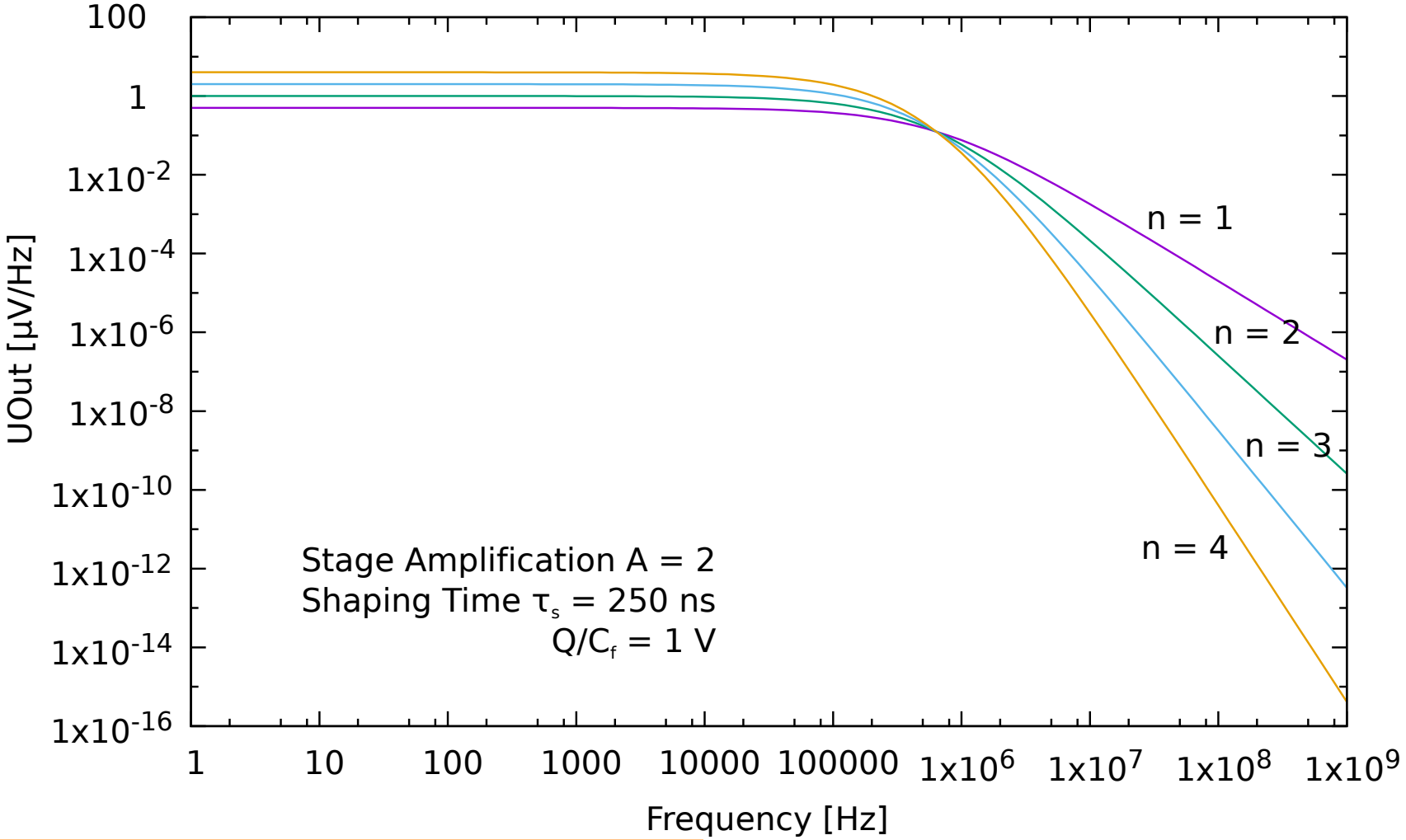

Noise of a Charge Sensitive Amplifier

Detector Signal Output

To get the output voltage in time domain one has to inversely Laplace transform eq. 36 [Sansen and Chang, 1990].

$$V_{Out}(t) = \frac{QA^n n^n}{C_f n!} \left(\frac{t}{\tau_s}\right)^n e^{-nt/\tau_s} \tag{37}$$

And for $t = \tau_s$:

$$V_{Out}(t) = \frac{QA^n n^n}{C_f n! e^n} \tag{38}$$

Noise of a Charge Sensitive Amplifier

Detector Signal Output

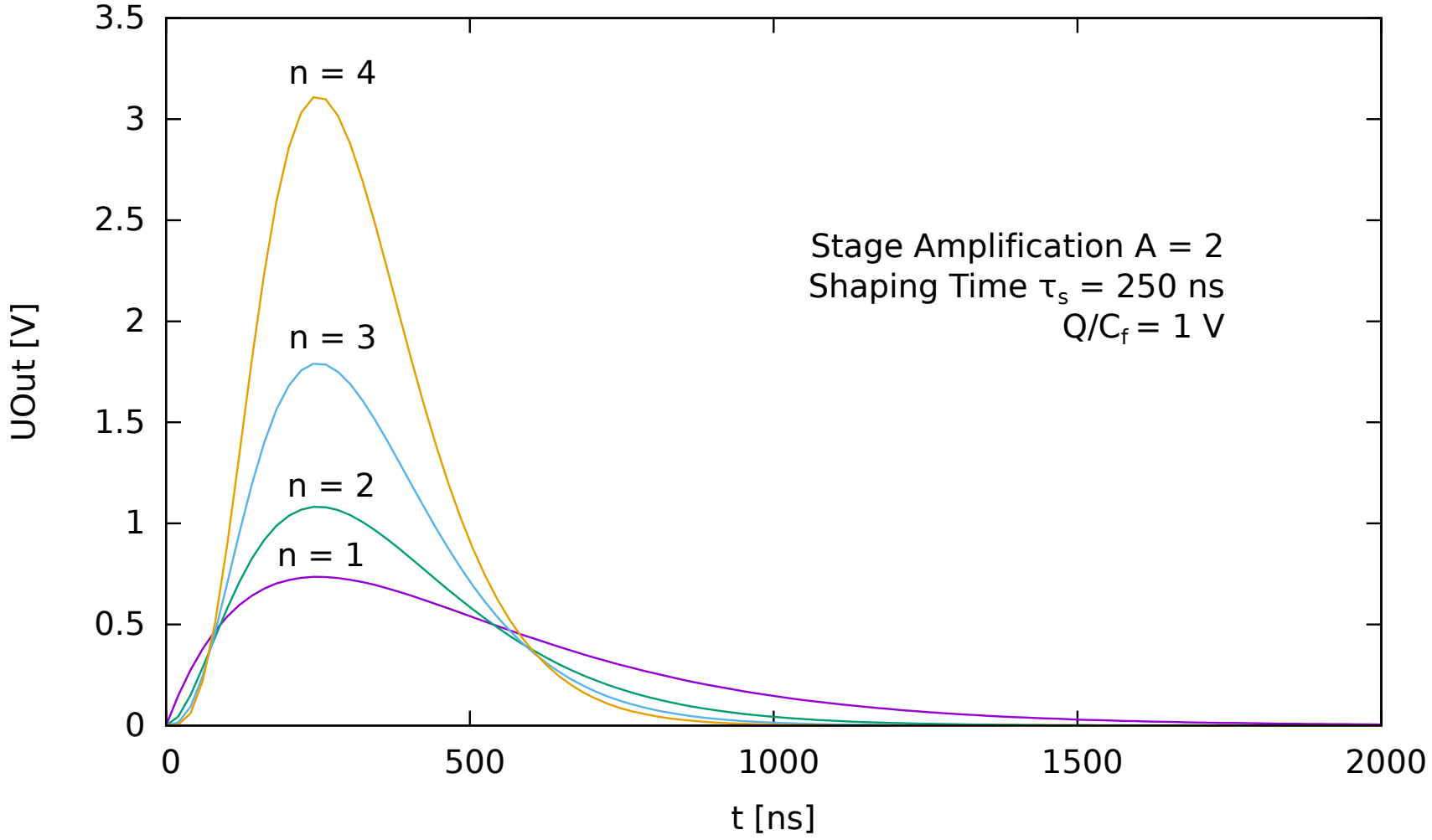

Noise of a Charge Sensitive Amplifier

Equivalent Noise Charge Calculation

ENC is the quotient of total output noise voltage v_{tot} and charge amplification $A_p = V_{Out}/Q$:

$$ENC = \frac{v_{tot}}{A_p} \tag{39}$$

To get v_{tot} one has to multiply the spectral noise density from eq 29 with the transfer function $H(s)$ of eq. 35 and integrate over the complete spectrum:

$$v_{tot}^2 = \int_0^\infty \left[v_{f(pout)}(s)\right]^2 [H(s)]^2 \, df \tag{40}$$

Noise of a Charge Sensitive Amplifier I

Parameter Optimisation

For a detailed solution of eq 40 look at
[Sansen and Chang, 1990, Chang and Sansen, 1991]
Here: Concentrate on main dependencies:

- Input Transistor Thermal Noise:

$$ENC \sim \sqrt{\frac{1}{g_m \tau_s}} C_T$$

- Input Transistor 1/f Noise:

$$ENC \sim \sqrt{\frac{C_T}{WL}}$$

Noise of a Charge Sensitive Amplifier II

Parameter Optimisation

- Shot Noise:

$$ENC \sim \sqrt{\tau_s}$$

- Feedback Resistor Thermal Noise:

$$ENC \sim \sqrt{\frac{\tau_s}{R_f}}$$

- complex dependency on integrator order n of all noise contributions

Noise of a Charge Sensitive Amplifier

Parameter Optimisation

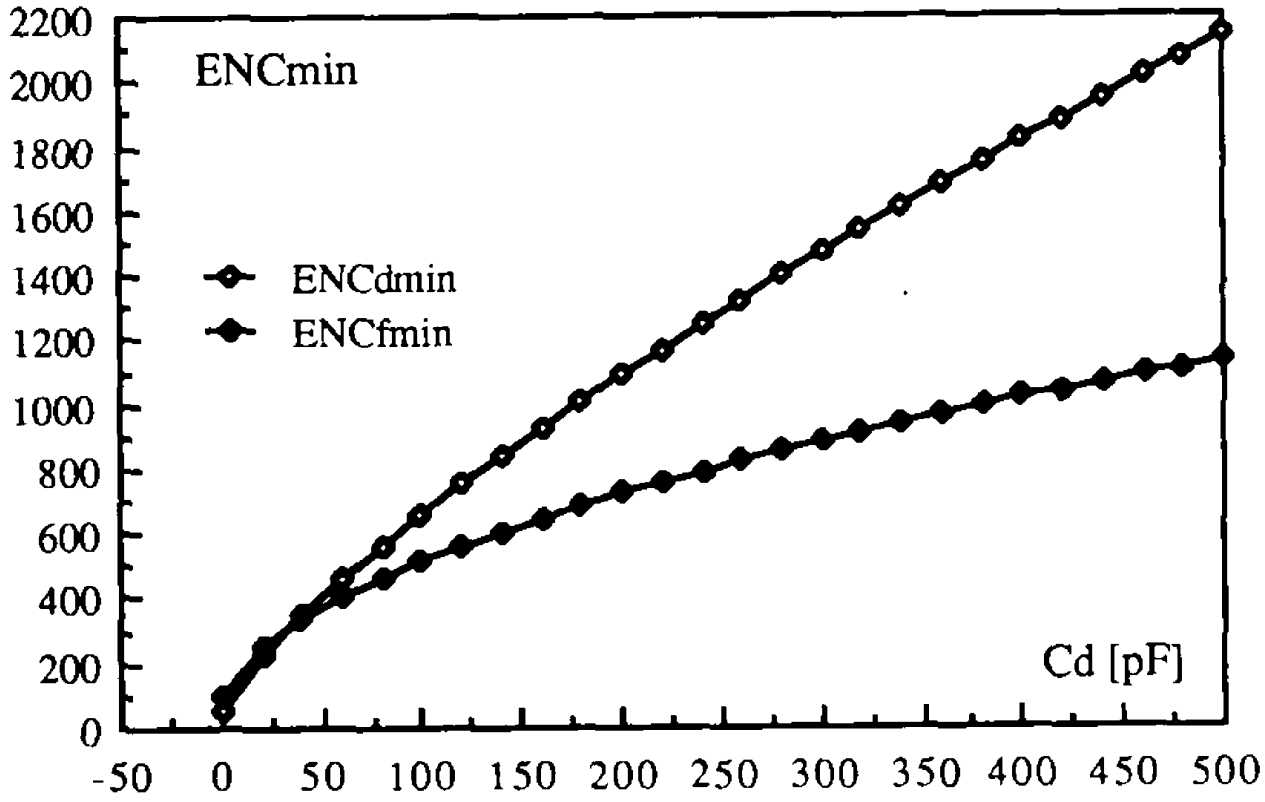

[Sansen and Chang, 1990]

Noise of a Charge Sensitive Amplifier

Parameter Optimisation

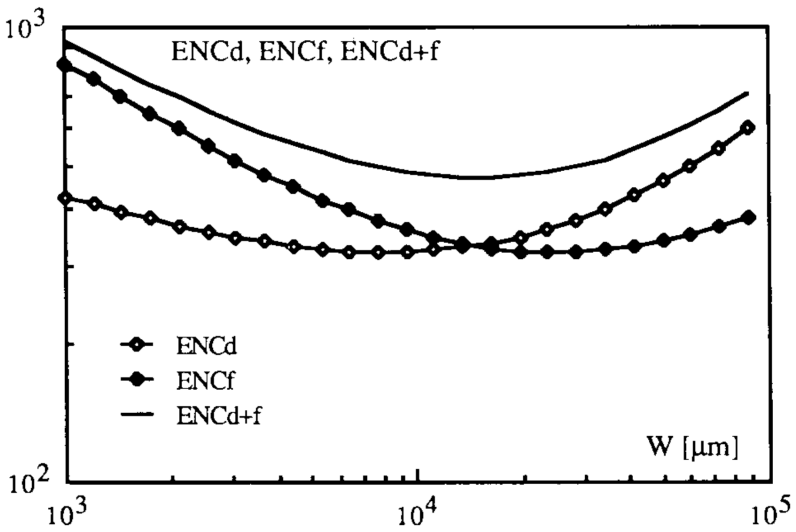

[Sansen and Chang, 1990]

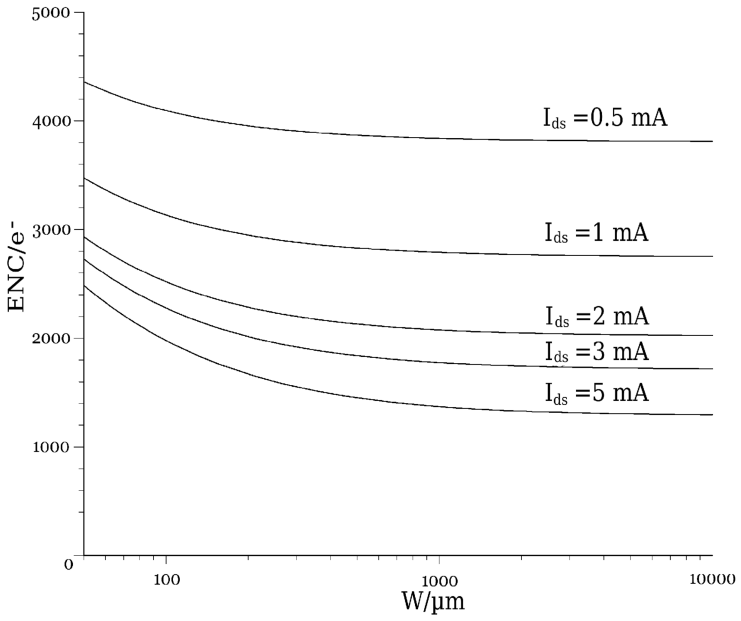

[Wieczorek, 2008]

Noise of a Charge Sensitive Amplifier

Parameter Optimisation

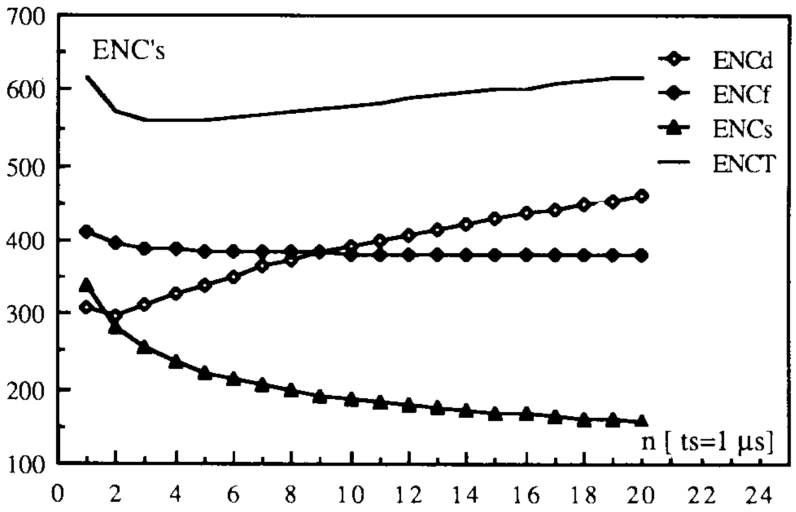

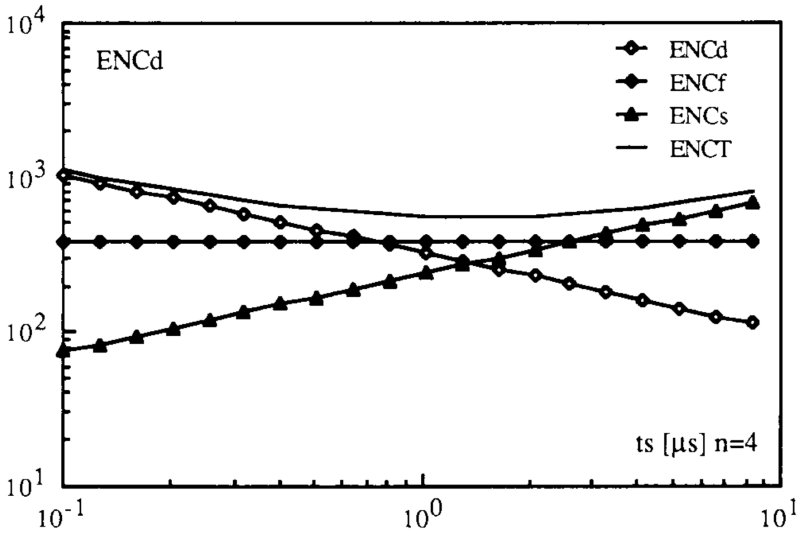

[Sansen and Chang, 1990]

Noise of a Charge Sensitive Amplifier

Parameter Optimisation

- To Reduce thermal transistor noise input transistors g_m should be as large as possible
  But: g_m is correlated with drain current $\Rightarrow$ Increasing g_m increases power consumption
- Larger shaping time τ_s decreases thermal transistor noise but increases shot noise and feedback resistor noise
  $\Rightarrow$ Optimum has to be found
  Also event rate has to be considered. Longer shaping time increase pile up
- **Preamplifier Design is a trade off between Noise Performance, Power Consumption and Speed**

Prospects in Scaled CMOS

CMOS Scaling

- "The number of Components per Chip doubles every 18 Months" (Moore's Law)[Moore, 1965]
- Development driven by digital logic demands
- Benefits
  - Higher Integration Level e.g. Pixel Sensor Readout
  - Complex Mixed Signal ASICs (System On Chip SoC)
  - More powerful FPGAs

Prospects in Scaled CMOS

CMOS Scaling

- But Analogue Design, esp. CSA design gets harder[O'Connor and De Geronimo, 2002]
  - Increase of MOST Noise (carrier heating, interface trap density, gate tunnelling current, parasitic resistance)
  - Reduced power supply voltage ⇒ output swing
  - Mixed signal designs ⇒ Digital switching in same substrate
  - Availability of passive components
  - Poor DC, AC and noise modelling

Prospects in Scaled CMOS

Device Noise Trends[O'Connor and De Geronimo, 2002]

Paper from 2002 discusses technology nodes down to 180 nm

- Thermal Noise

$$I_f^2 = 4kT\gamma g_m; \quad \gamma = \begin{cases} 1 & \text{in linear region} \\ \frac{2}{3} & \text{in saturation region} \\ \frac{1}{2} & \text{in Weak inversion} \end{cases} \tag{41}$$

Carrier heating due to larger fields $\Rightarrow$ indication for increasing of γ
Values 2 - 4 reported for experimental devices, seems not to be the case for regular devices

Prospects in Scaled CMOS

Device Noise Trends

- $1/f$-Noise
  - K_F seem to stay constant
  - Due to changes in doping an increase of K_F for PMOS to a values near that of NMOS is expected
  - New materials for ultra thin dielectrics might increase K_F
- Gate Current
  - Due to an increase of gate leakage additional noise is introduced

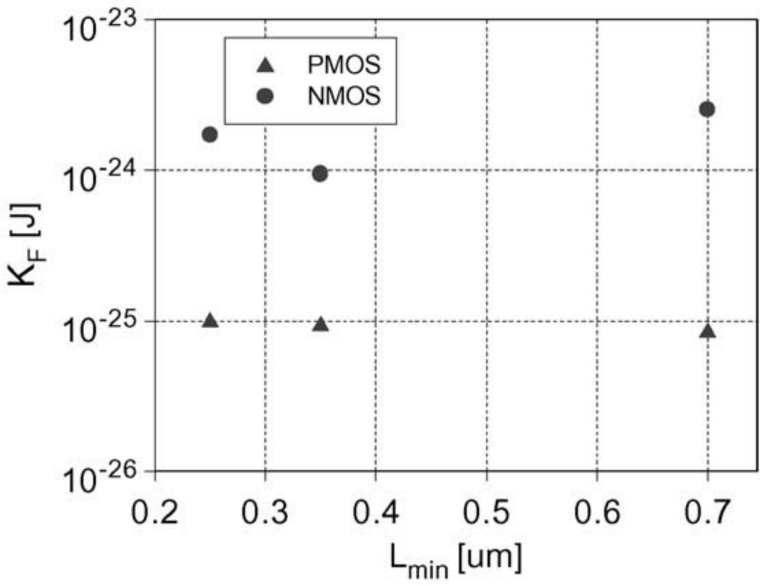

Prospects in Scaled CMOS

ENC and Dynamic Range Scaling

- For ENC scaling not only device noise has to be taken in account[O'Connor and De Geronimo, 2002].
- Scaling factor λ For a CMOS generation typically $\lambda = 0.7$
- ENC in saturation and medium inversion region:

$$ENC_{next} = \lambda^{3/4} ENC \quad (-23\ \%\ \text{per generation}) \tag{42}$$

- Power:

$$P_{next} = \lambda^{3} P \quad (-60\ \%\ \text{per generation}) \tag{43}$$

- Dynamic Range:

$$SNR_{next} = \lambda^{1/4} SNR \quad (-10\ \%\ \text{per generation}) \tag{44}$$

Prospects in Scaled CMOS

ENC and Dynamic Range Scaling

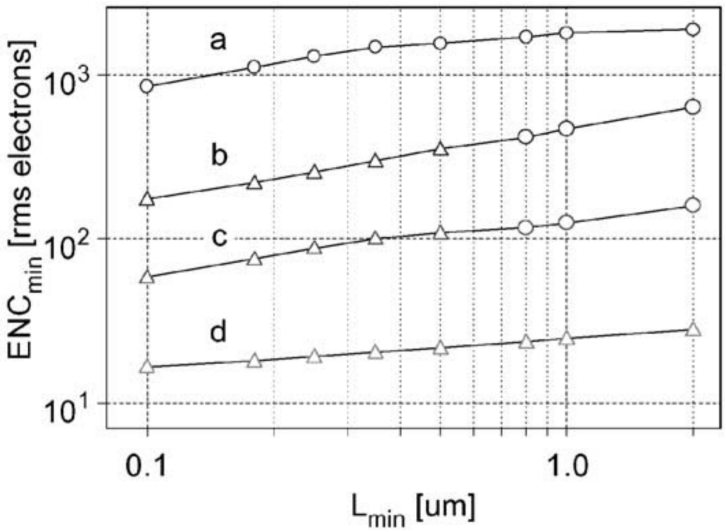

[O'Connor and De Geronimo, 2002]

	C_{Det}/pF	t_s/ns	P/mW	I_{leak}/nA
a	30	75	10	0.0001
b	15	25	0.2	10
c	0.3	25	0.02	1
d	3	2500	10	0.01

Asgaran, S., Deen, M. J., and Chen, C.-H. (2004). Analytical modeling of mosfets channel noise and noise parameters. *IEEE Transactions on Electron Devices*, 51(12):2109–2114.

Chang, Z. Y. and Sansen, W. M. (1991). *Low-Noise Wide-Band Amplifiers in Bipolar and CMOS Technologies*. Kluwer Avademic Publishers.

Enz, C. C., Krummenacher, F., and Vittoz, E. A. (1995). An analytical mos transistor model valid in all regions of operation and dedicated to low-voltage and low-current applications. *Analog Integrated Circuits and Signal Processing*, 8(1):83–114.

Jordan, A. G. and Jordan, N. A. (1965). Theory of noise in metal oxide semiconductor devices. *IEEE Transactions on Electron Devices*, 12(3):148–156.

Moore, G. E. (1965). Cramming more components onto integrated circuits, electronics,(38) 8.

O'Connor, P. and De Geronimo, G. (2002). Prospects for charge sensitive amplifiers in scaled cmos. *Nuclear Instruments and Methods in Physics Research Section A: Accelerators, Spectrometers, Detectors and Associated Equipment*, 480(2):713–725.

Sansen, W. M. C. and Chang, Z. Y. (1990). Limits of low noise performance of detector readout front ends in cmos technology. *IEEE Transactions on Circuits and Systems*, 37(11):1375–1382.

Tedja, S., der Spiegel, J. V., and Williams, H. H. (1994). Analytical and experimental studies of thermal noise in mosfet's. *IEEE Transactions on Electron Devices*, 41(11):2069–2075.

Wieczorek, P. (2008). *Entwicklung eines ladungsempfindlichen Vorverstärkers zur Auslese von Lawinenfotodioden*. PhD thesis, Johann Wolfgang Goethe Universität in Frankfurt am Main.