Westfälische Wilhelms-Universität Münster

Requirements and Design of a CBM-TRD Gas System Prototype

DPG-Frühjahrstagung Münster
2017, March 27th – 31th

Felix Fidorra
WWU Münster, Germany
f_fido01@uni-muenster.de

Bundesministerium für Bildung und Forschung
GSI
FAIR
Seventh Framework Programme
Study of Strongly Interacting Matter
HadronPhysics

Table of Contents

- Gassystem Overview
- Mixing Station
  - Requirements
  - Design
- Analysis Station
  - Requirements
  - Design
- Performance at SPS Test Beam 2016
- Outlook

The Gas System

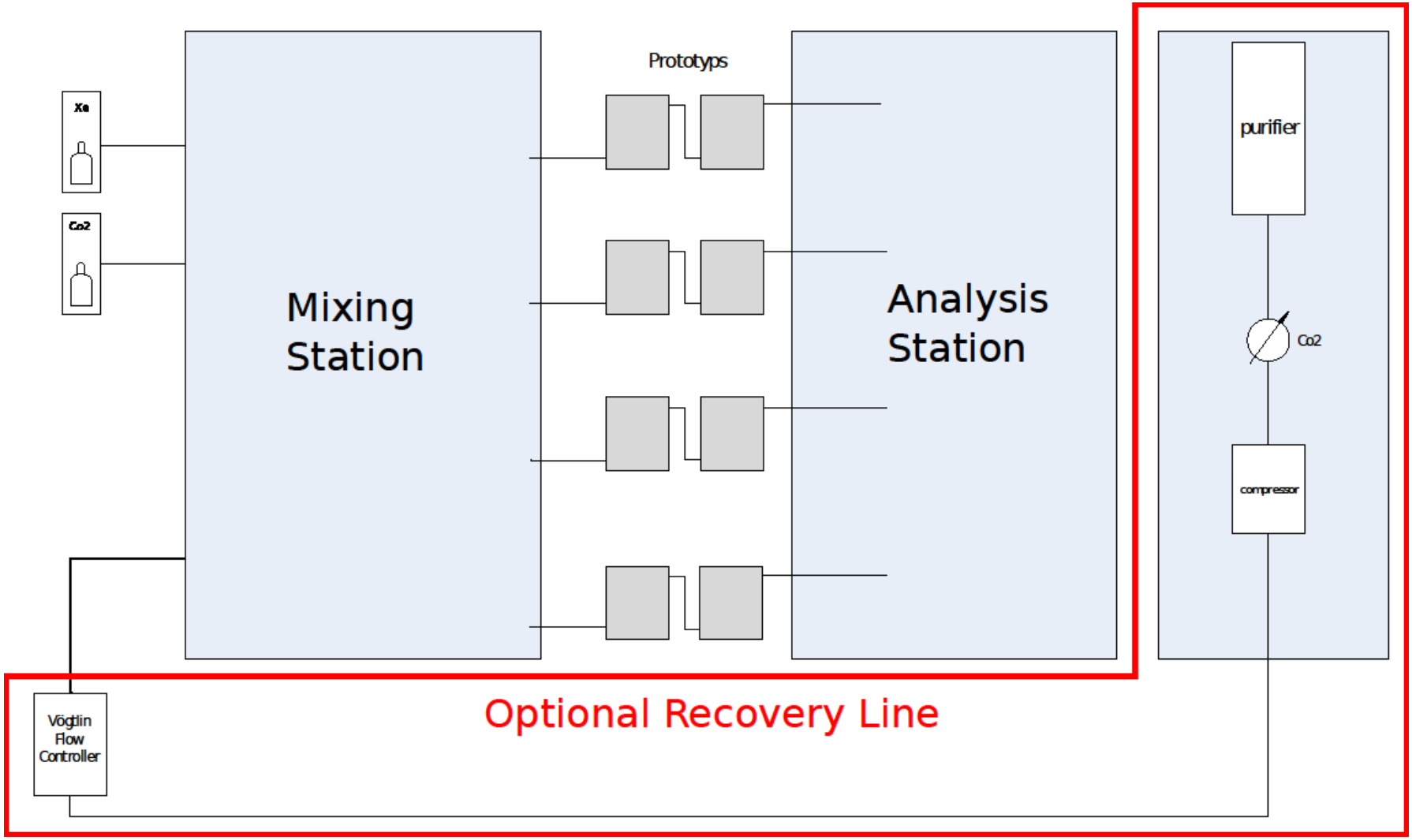

Mixing Station: Requirements

- Provides four detector lines with adjustable gas flows (argon or xenon and CO_2)
- Each line has an individually adjustable gas flow
- Relative pressure guaranteed lower than 1 mbar to prevent damage
- Fulfill purity requirements

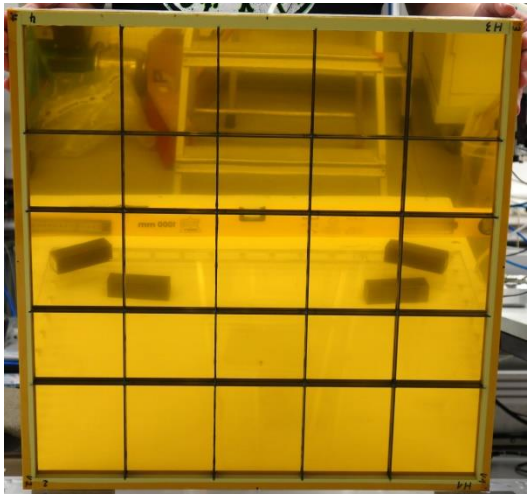

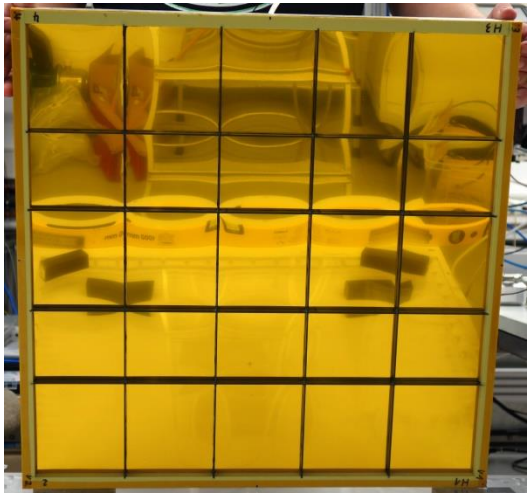

Mixing Station: Design

- Rack mountable solution
- Build on a 19“ aluminium plate

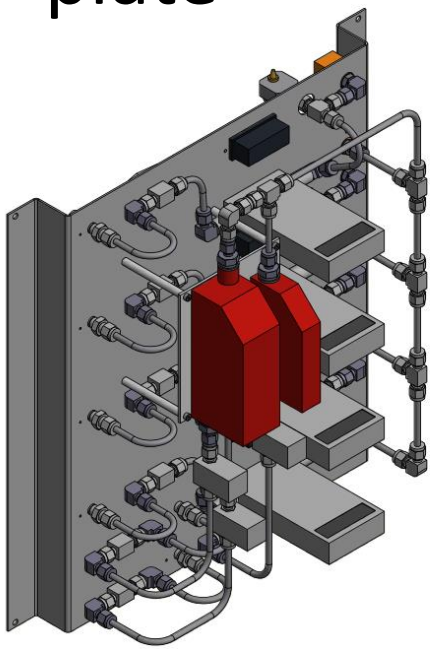

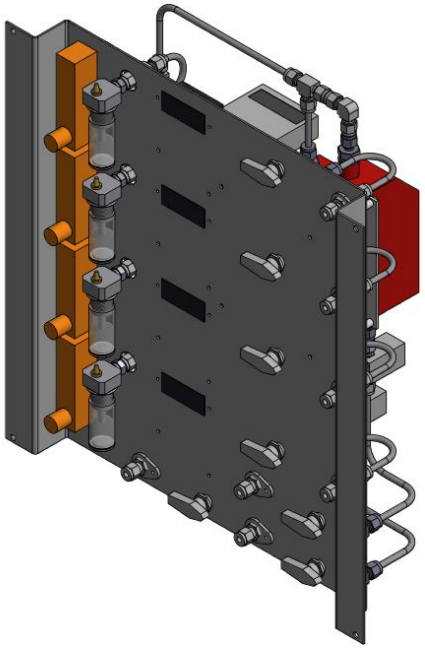

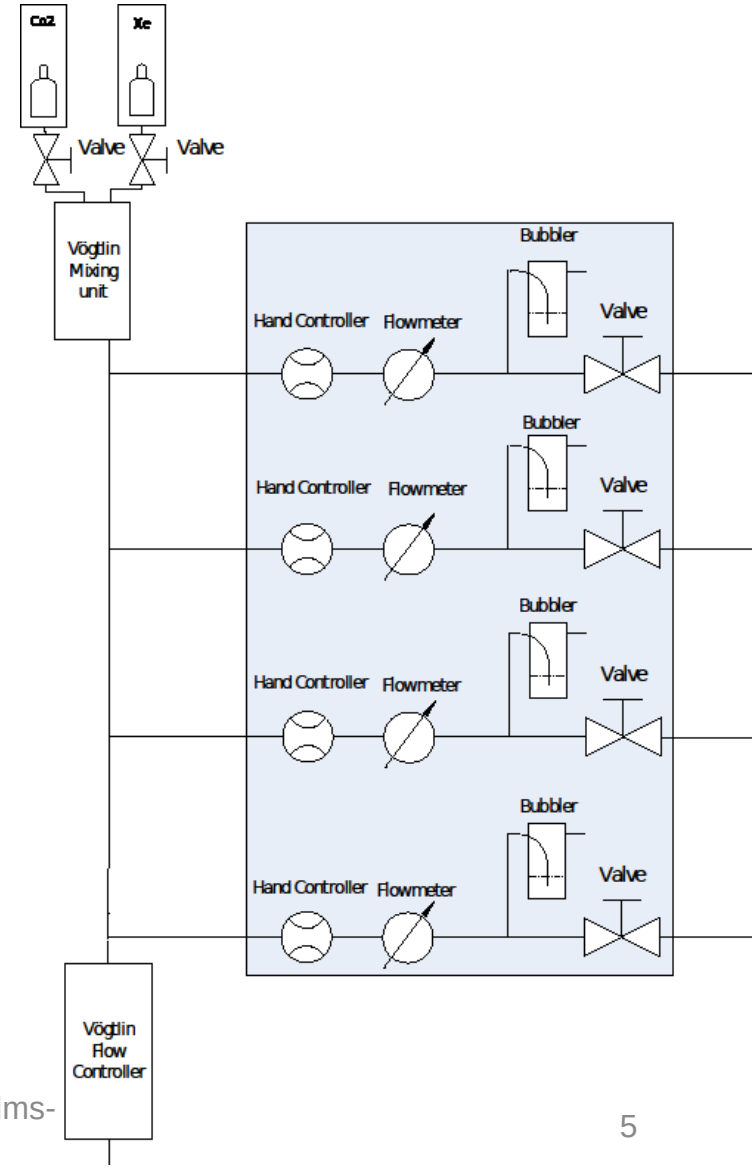

Analysis Station: Requirements

- Measurement of oxygen contamination
- Measurement of humidity
- No backpressure
- Easy mountable and demountable oxygen sensor

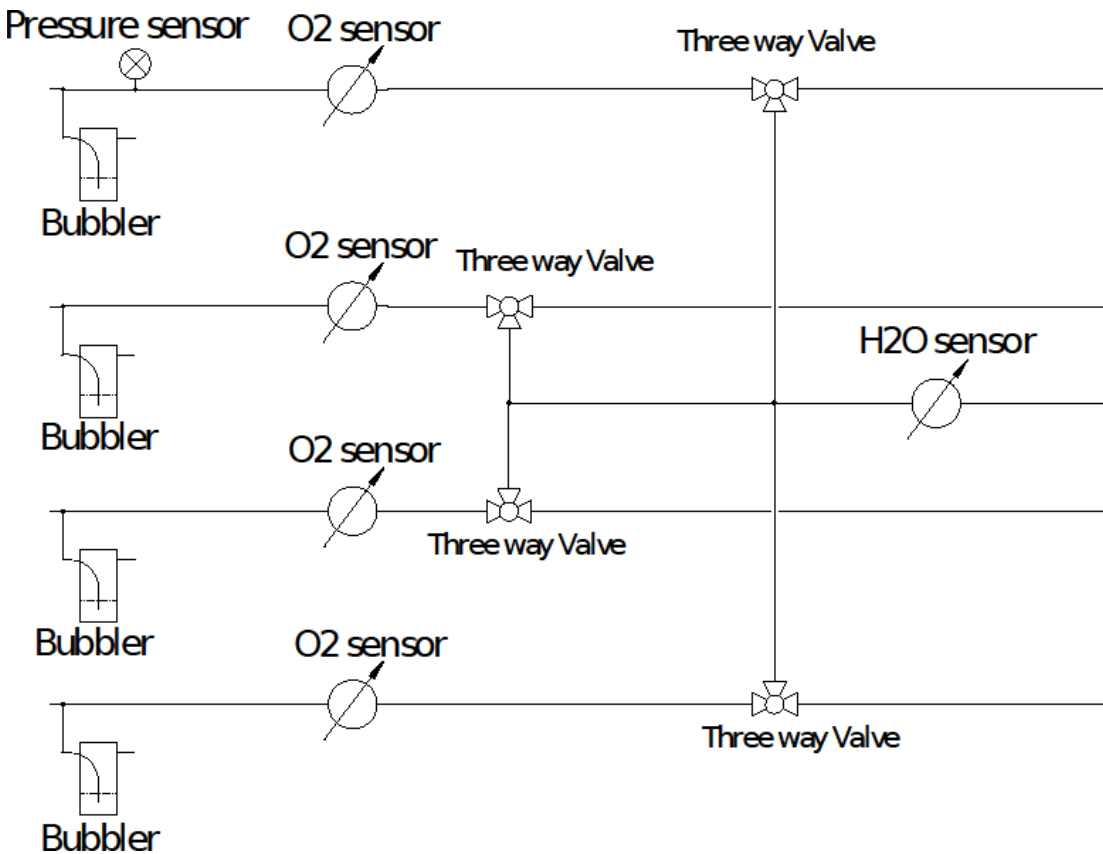

Analysis: Design

- Rack mountable aluminium plate
- Mounting point for additional oxygen sensors
- Overpressure protection

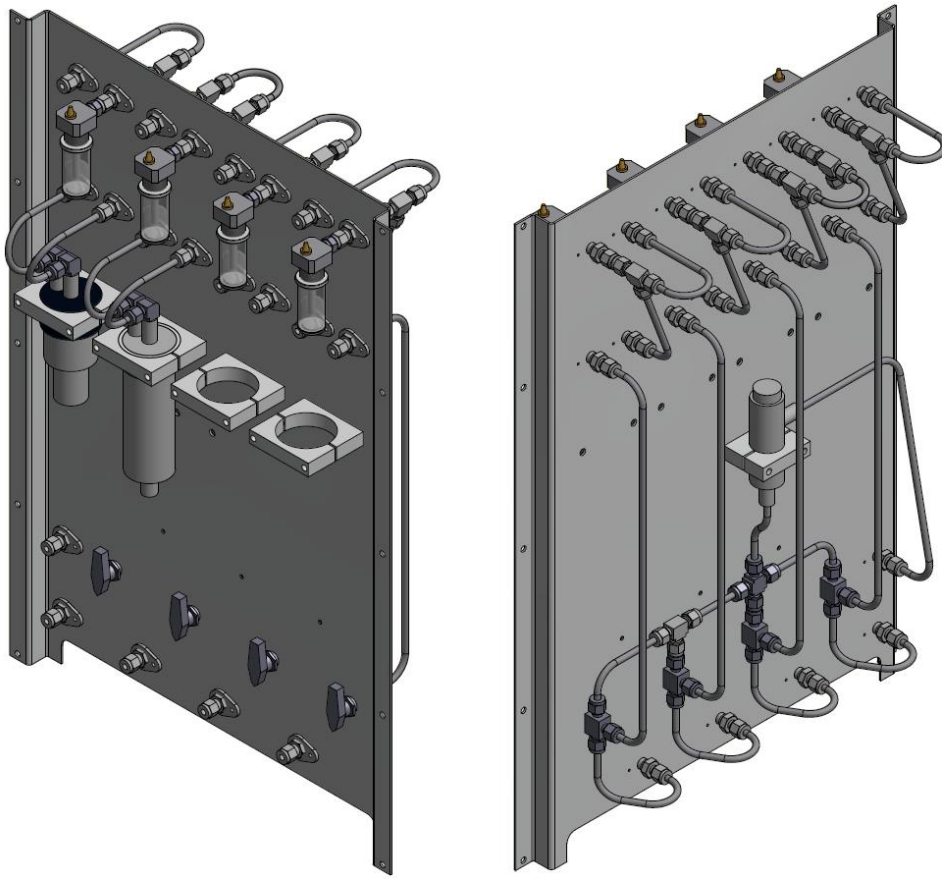

Performance at SPS Test Beam 2016

- Stable gas supply for over 6 weeks
- Oxygen content well below 50 ppm for the whole operating time

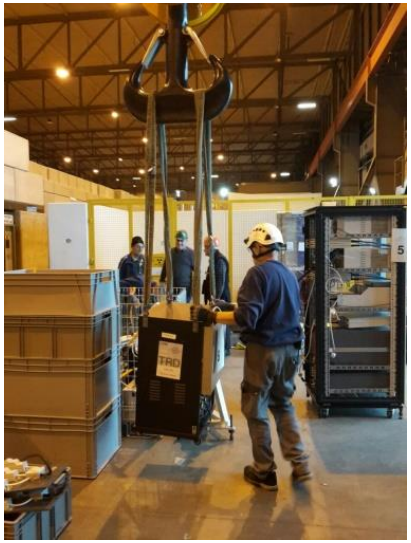

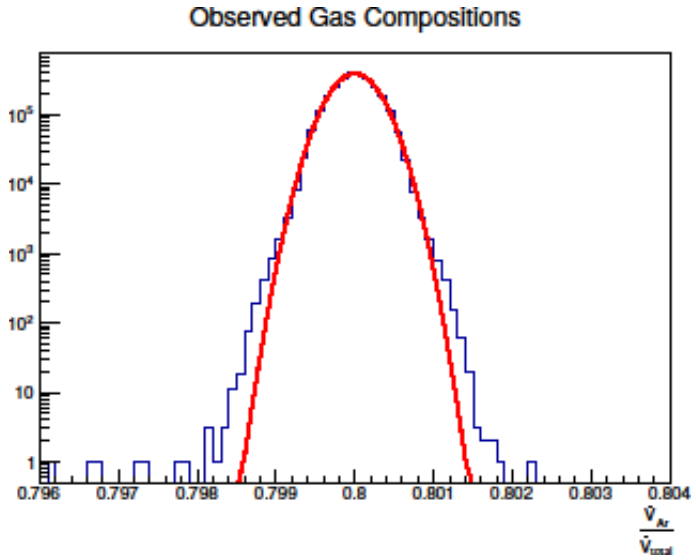

Outlook

- Continuous operation for laboratory measurements
- Gas supply for test beam at DESY and GIF^{++}
- Further testing for mini CBM
- Recovery station for re-extracting xenon
- Starting: development work for CBM gas supply