Development of Compact Ion Accelerators

Dr. Hendrik Hähnel

AG Prof. Ratzinger

Institute of Applied Physics, Goethe University Frankfurt

KfB – Workshop, TU-Darmstadt

August 31st, 2017

Institut für Angewandte Physik

Achievements: Poststripper IH-DTL

Proposed replacement for Alvarez DTL

- Shorter (23 m vs. 60 m)
- Cheaper (18 M€ vs. 28 M€)

Beam dynamics for 15 mA U^{4+}

- Good beam quality
- Capable of even higher currents

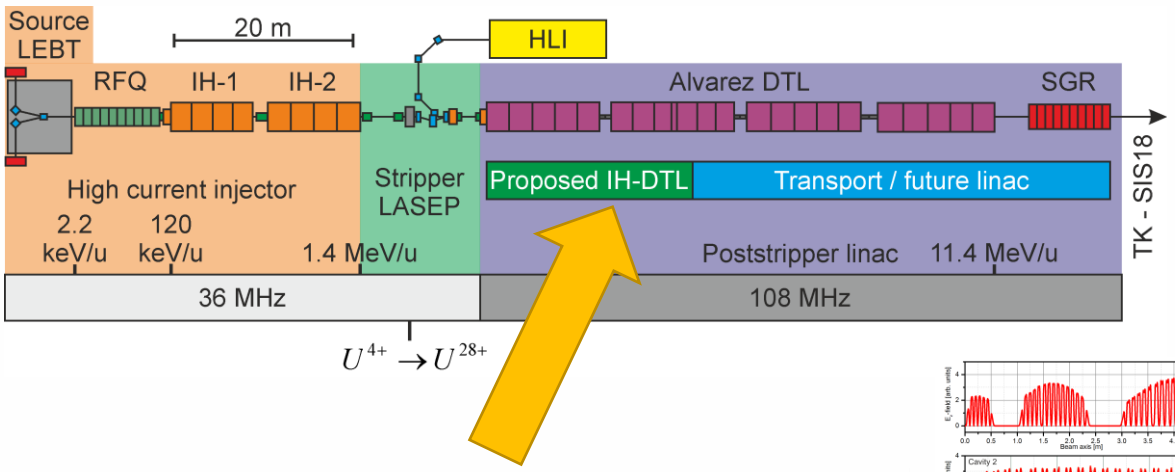

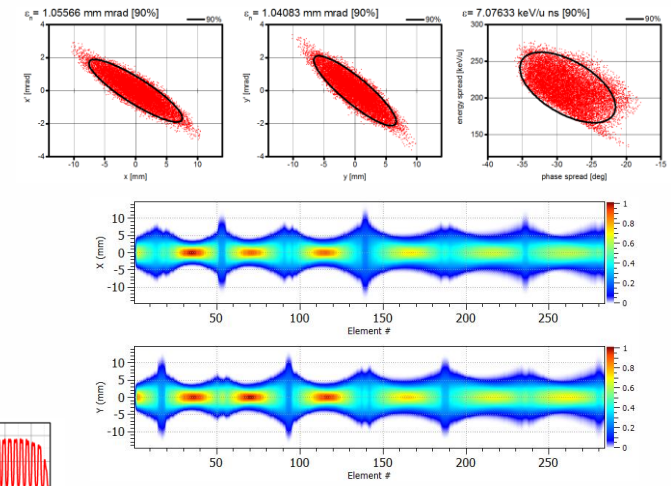

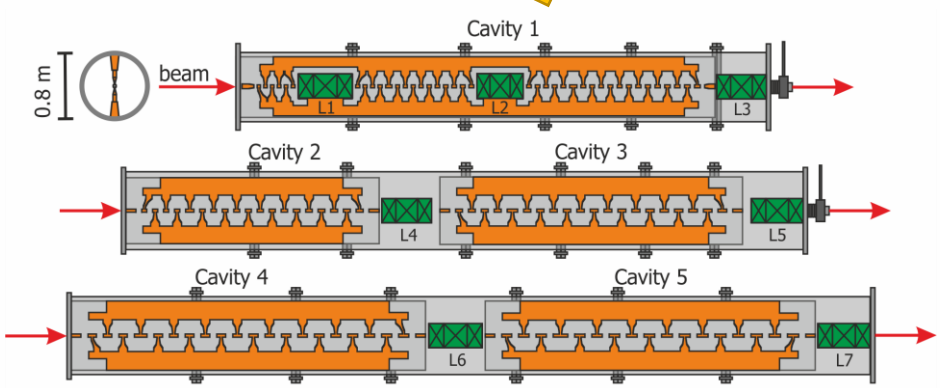

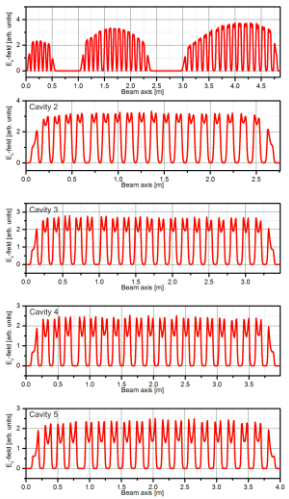

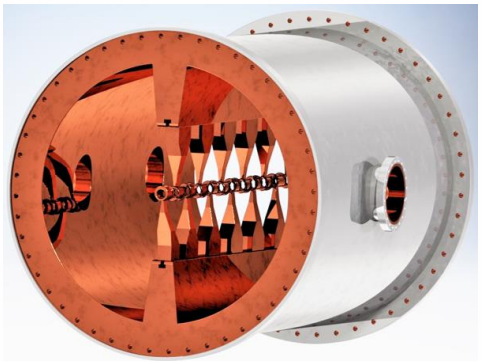

High Energy Linac for Heavy Ions

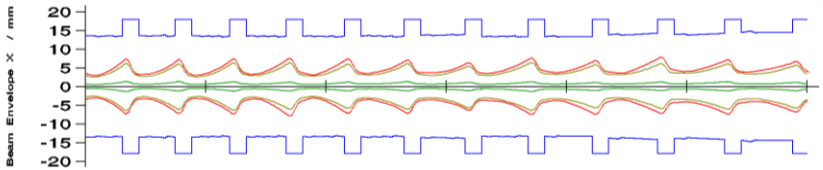

Development of beam dynamics concepts optimized for the acceleration of heavy ions ($A/q \leq 8.5$) up to 100 MeV/u.

Development of RF cavities with high gradients > 10 MV/m (next slide)

- Space charge challenge (high beam currents)
- Stable beam dynamics (periodic focusing concept)
- H-mode (CH) cavities for efficient acceleration
- Possible use case: Future direct injection into SIS100
  - Alternative to SIS18 @ highest intensities

High gradient CH-type cavities

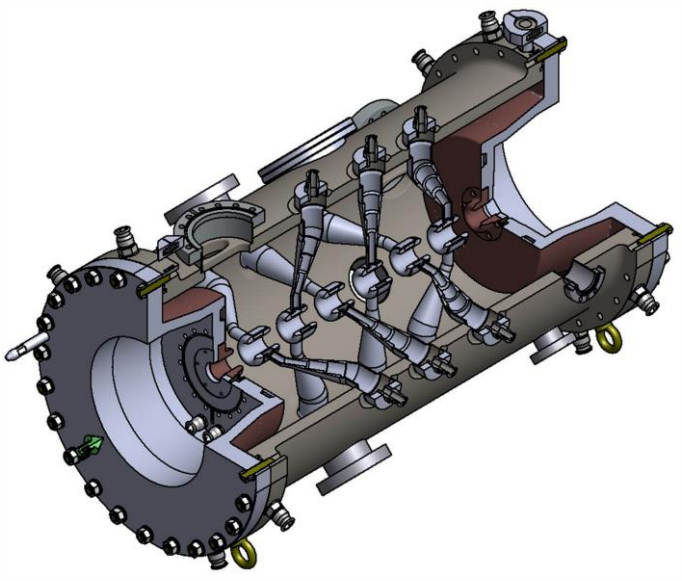

Table 1: Main Parameters of the High Field CH – Cavity

Number of Gaps	7
Frequency (MHz)	325.224
Voltage Gain (MV)	6
Eff. Accel. Length (mm)	513.9
Average Eff. Accel. Field (MV/m)	13.3
Power Loss (MW)	1.76
Q_0 – value	12500
Effective Shunt Impedance (MΩ/m)	52.15
Aperture Diameter (mm)	27

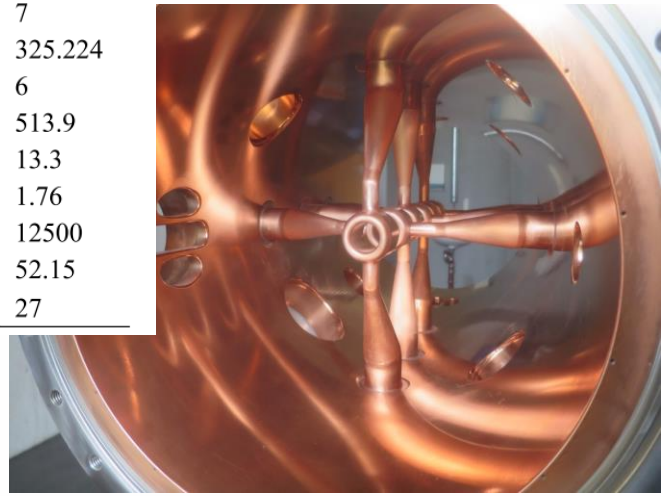

- Conditioning & power test of existing 325 MHz CH-prototype
- Investigation of surface treatments for highest gradient
- Cold cavity with LN_2 to reduce power loss (massive copper cavity)
- Development of cavities for the High Energy Heavy Ion Linac

Development of a Compact Linac Concept for Future Applications

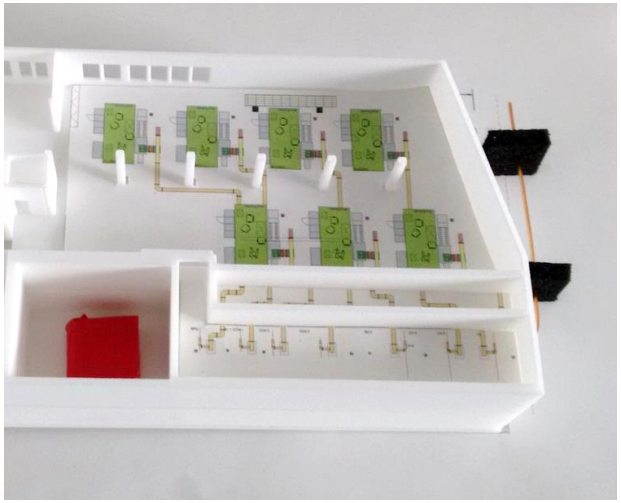

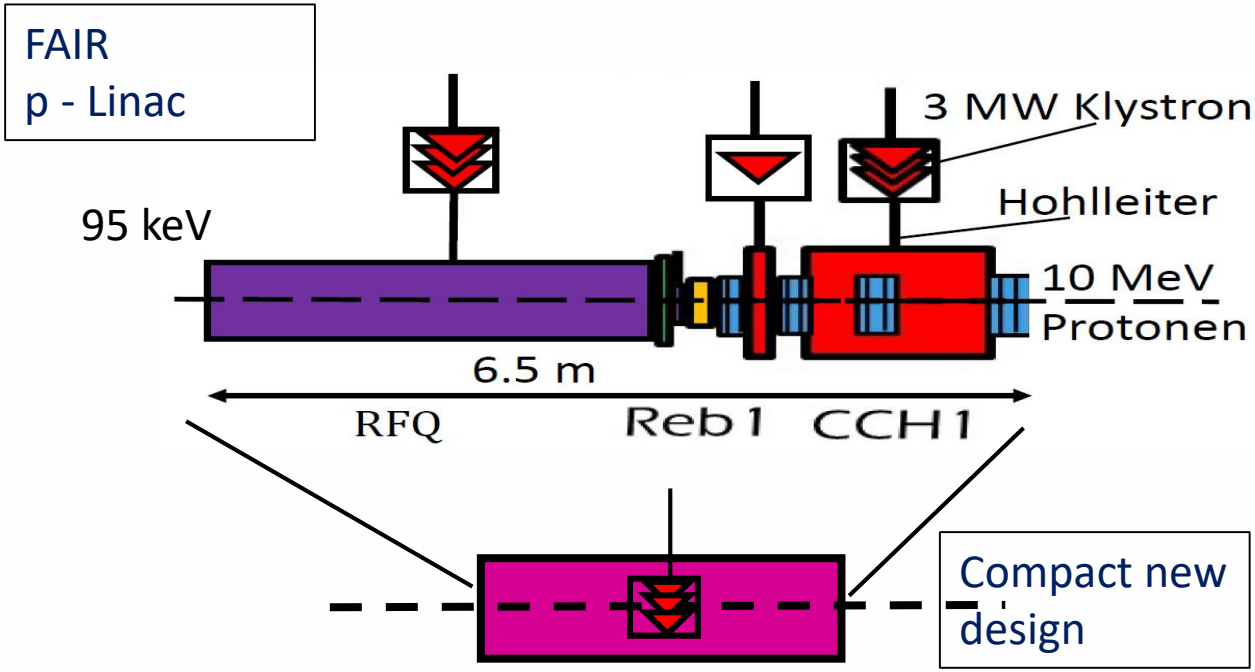

Direct coupling of the RF amplifier(s) to the linac cavity.
Development of attractive solutions for the following applications:

1. Production of short-lived PET – Isotopes with a 10 MeV p-linac.
2. Compact heavy ion linac for energies up to 100 MeV/u.

Thank you!

AG Prof. Ulrich Ratzinger

Name	Position	Funktion
Klaus Volk	Wiss. Mitarbeiter	Strahlexperimente, Ionenquellen
Rudolf Tiede	Wiss. Mitarbeiter	Strahldyn.,Code-Entwicklung, Administration
Christopher Wagner	Wiss. Mitarbeiter	Controls, Elektronik
Ali Almomani	Postdoktorand	Strahldynamik, Resonatorauslegung
Hendrik Hähnel	Postdoktorand	Strahldynamik Unilac
Batu Klump	Postdoktorand	Strahlexperimente, Ionenquellen
Marc Syha	Doktorand	RFQ – Strahldynamik und Resonator
Max Schütt	Doktorand	Resonatordesign, Leiter - RFQ
Adem Ates	Doktorand	Strahldiagnose
Heiko Niebuhr	Doktorand	Strahltransport
Onur Payir	Master	Strahlseparation
Jan Kaiser	Master	Unilac - Hochenergieausbau
Qizheng Yan	Master	Strahlseparation
Christian Wirth	Bachelor	Strahldynamik, Code - Vergleiche
Leon Skorpil	Bachelor	Ionenquellenentwicklung