SciTil/BarrelTOF FEE Overview

Ken Suzuki, Stefan-Meyer-Institut, ÖAW
09.04.2015 PANDA FEE Workshop at GSI

Barrel-TOF Detector in TS = SciTil

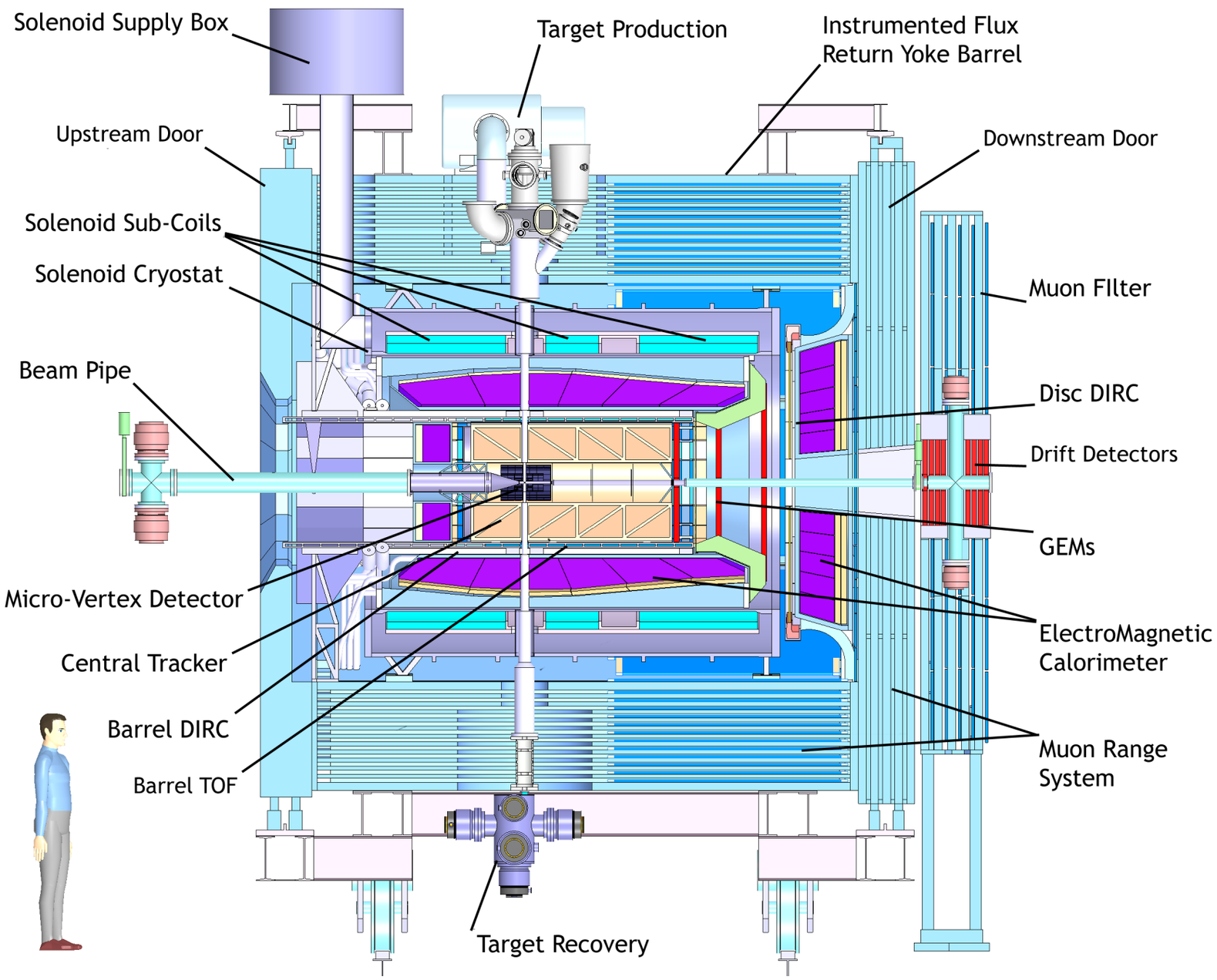

MVD<STT<DIRC<SciTil<EMC

First drawing in the EDMS

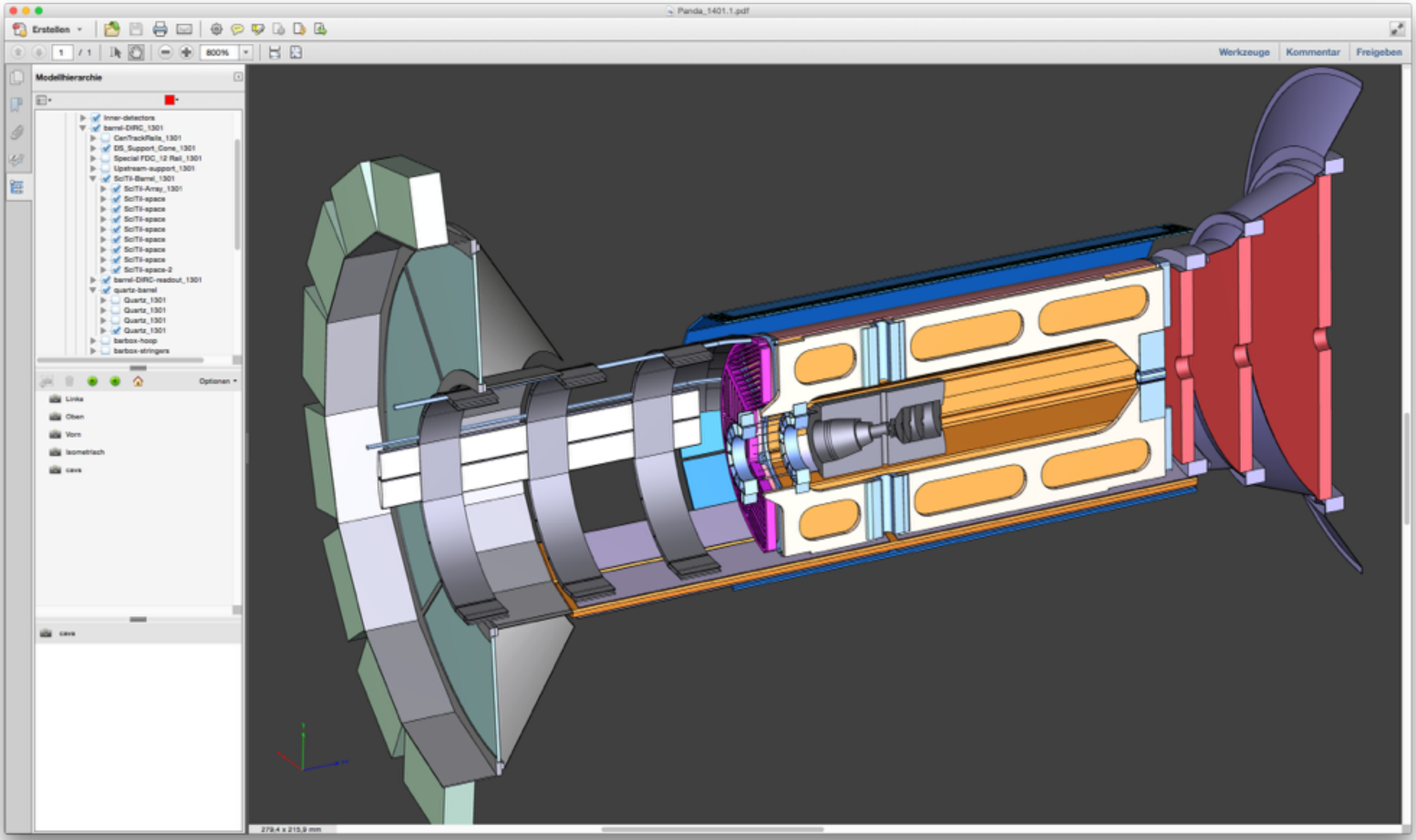

Conceptual design, Proposal

Proposal for a Scintillator Tile Hodoscope for $\overline{\text{P}}$ANDA

Version 1.1

K. Goetzen, H. Orth, G. Schepers, L. Schmitt, C. Schwarz, A. Wilms

Abstract

In this document a new detector in place of the barrel time-of-flight detector is proposed. This detector is based on small scintillator tiles read out by silicon photomultipliers. The motivation in terms of physics and technical benefits are summarized. Details of the detector layout are given.

K. Goetzen et al., Proposal for a scintillator barrel hodoscope for $\bar{\text{P}}$ANDA

SciTil Group

- Erlangen
- GSI*
- Mainz*
- Stefan-Meyer-Institut, Vienna*
- India (Gauhati-U. Assam, Visva Bharati-U. Bolpur, BARC Mumbai)

*FEE

Raison d’être

- Event timing, t0
- Pattern recognition
- Relative timing, PID
- Preshower detection and correction

SciTil Boundary Conditions

- Limited space (<2 cm in radial direction)
- Minimum material budget (<2% of radiation length)
- Mechanics shared with DIRC
- Simple and robust, works reliably from day-one
  - reference for calibrating other detector systems
- Fast readout, to be used in track finding algorithm/pattern recognition
- Time resolution <100 ps

Detector Layout

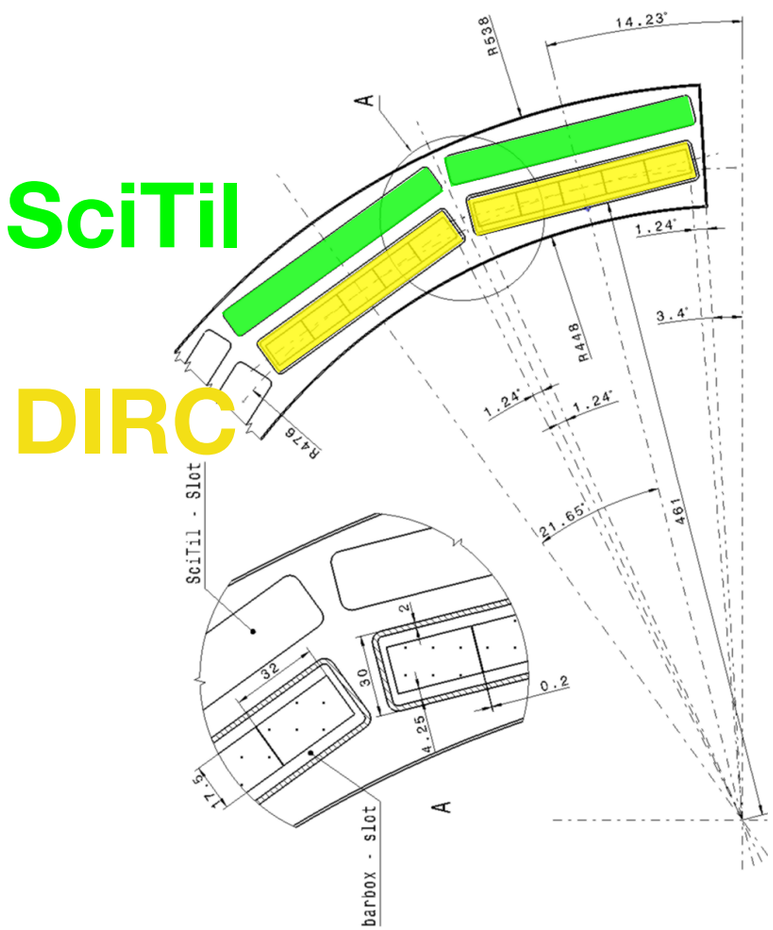

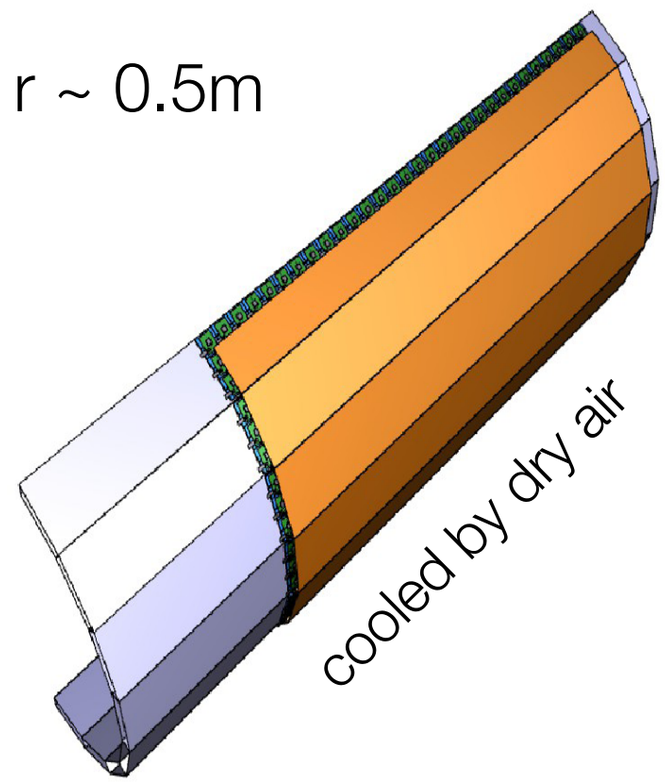

16 Super modules
outside of DIRC barrel

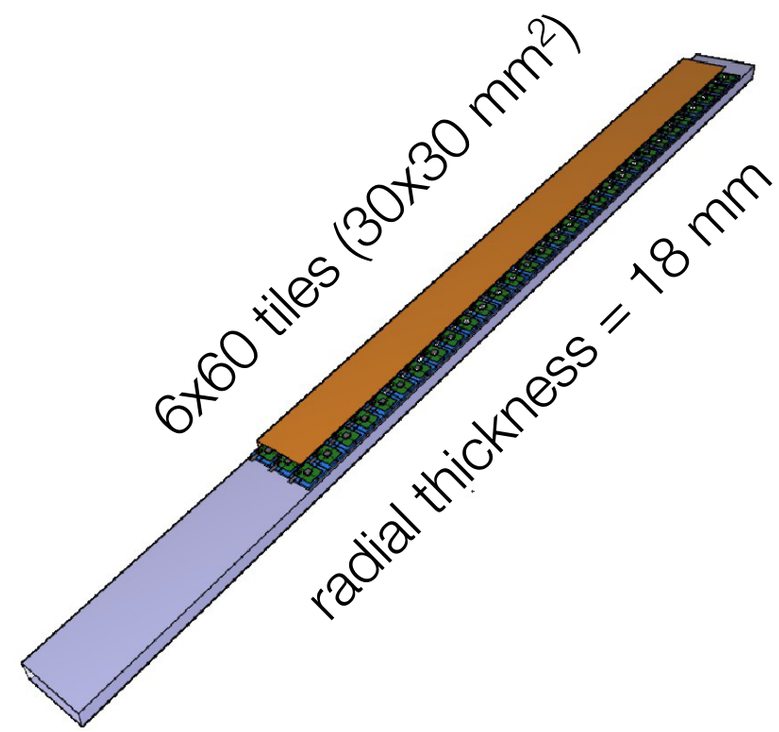

Super module
= 1800x180

Total 5760 SciTil module = 11420 SiPM channels

K. Goetzen et al., Proposal for a scintillator barrel hodoscope for P̄ANDA

Detector Layout

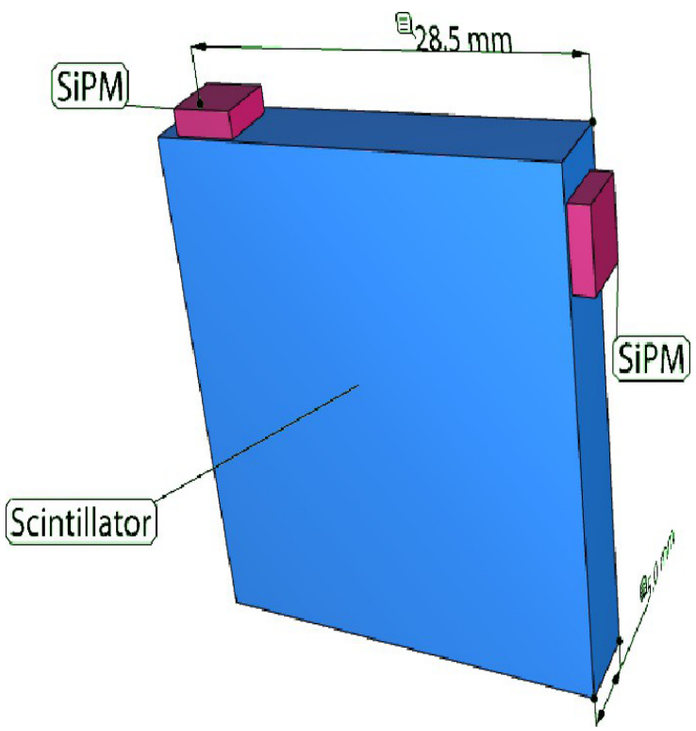

Readout at 2 positions

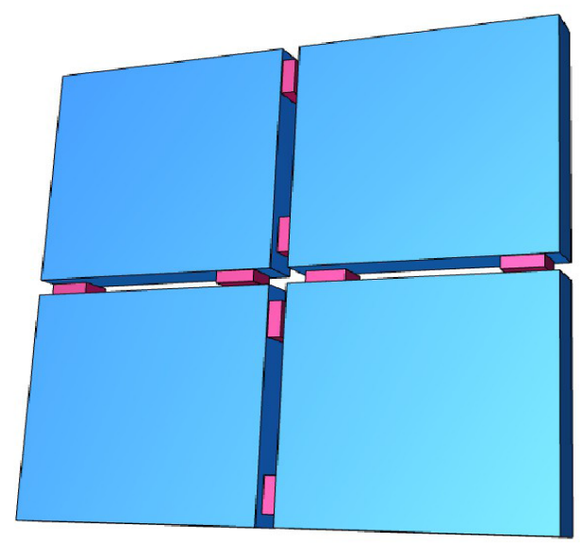

Quad module

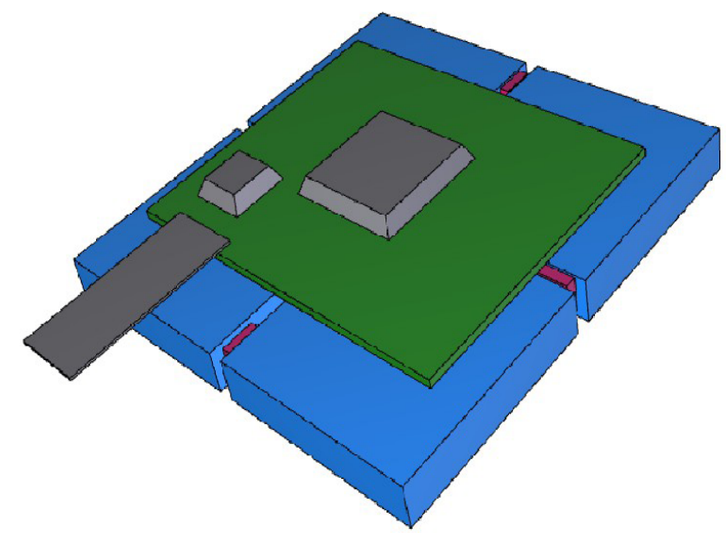

with electronics
8ch ASIC
data transfer IC

K. Goetzen et al., Proposal for a scintillator barrel hodoscope fo P̄ANDA

Project Status

Single tile performance (original geometry) fulfilled the target time resolution

JESSICA@COSY@FZ-Jülich, Jan2014

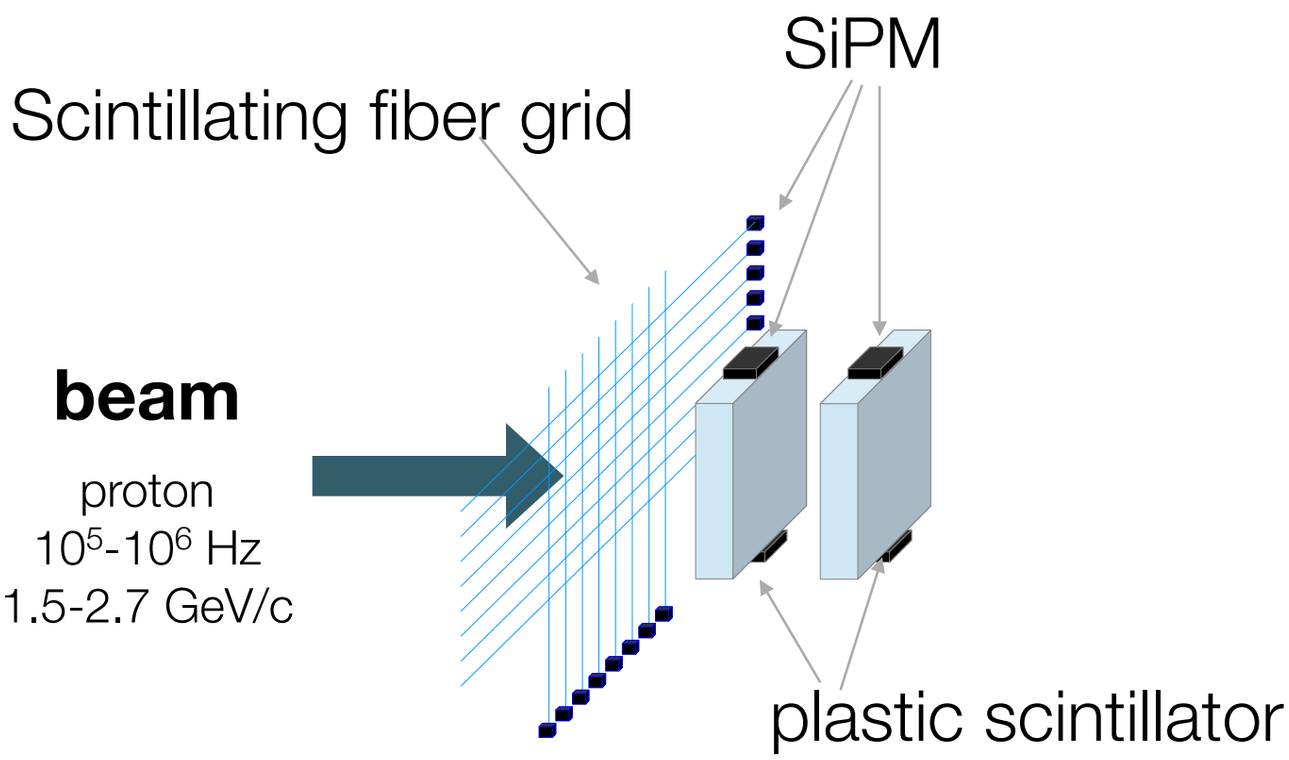

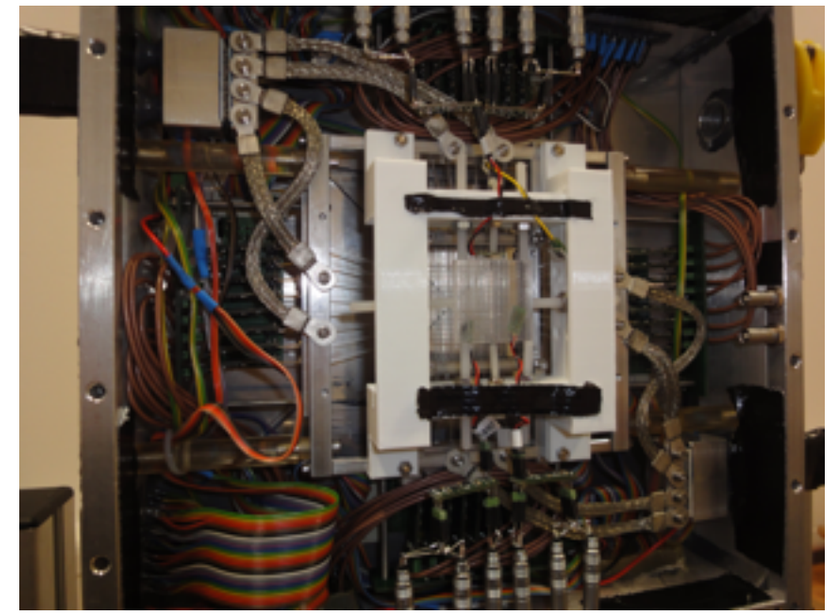

SiPMs:
HPK MPPC S12572-025C
HPK MPPC S12572-050P
KETEK PM3350
KETEK PM3360

×

Scintillators:
EJ-228 (Pilot-U/BC-418)
EJ-232 (BC-422)

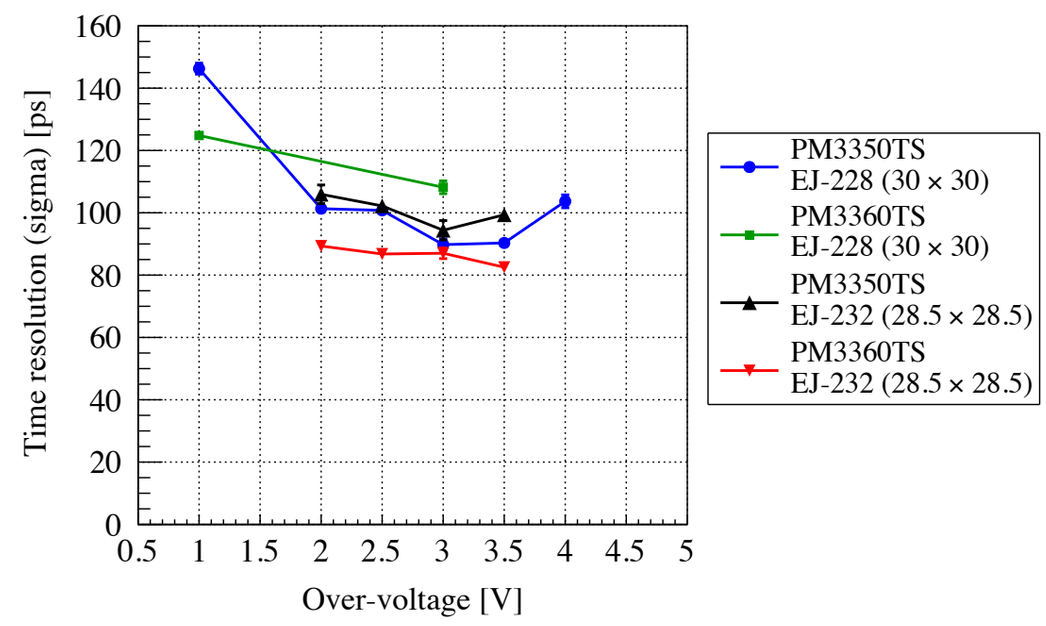

L. Gruber Ph.D Thesis

Further optimisation of Single-Tile Performance

- You may say, it's marginal?
  - real $\bar{P}$ANDA environment and high rate?
  - quality fluctuation of sensor and assembly?
  - ageing, radiation?
- high spec. hardly an overkill
- Optimisation
  - (Symmetric configuration)
  - (dSiPM)
  - SciRod (Erlangen)
  - MEG2 e^+ counter

SciRod (Erlangen)

more lightguide-like tile geometry

Scintillator Samples

BC408 (τ = 2.1 ns)

- 5 x 5 x 170 mm^3
- 5 x 5 x 120 mm^3
- 5 x 5 x 50 mm^3
- 5 x 10 x 120 mm^3
- 5 x 10 x 50 mm^3

- 5 x 30 x 30 mm^3

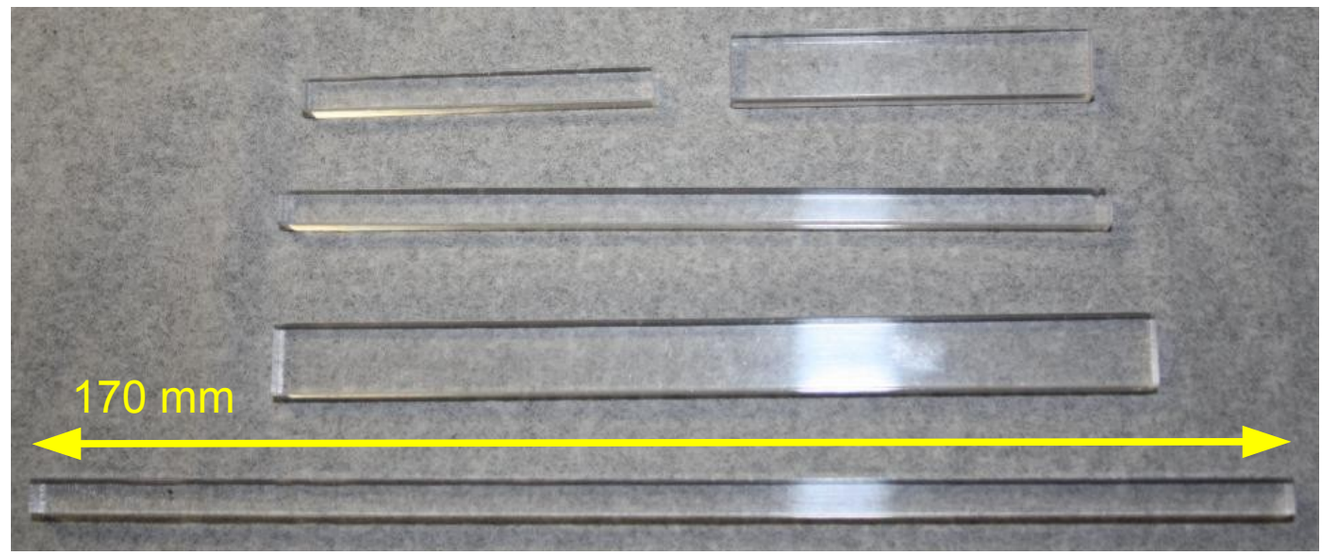

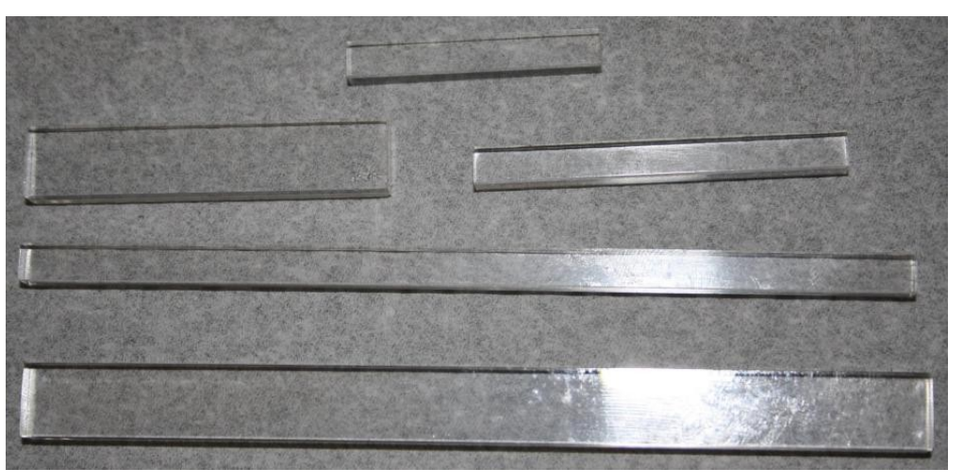

BC420 (τ = 1.5 ns)

- 5 x 5 x 120 mm^3
- 5 x 5 x 50 mm^3
- 5 x 5 x 30 mm^3
- 5 x 10 x 120 mm^3
- 5 x 10 x 50 mm^3
- 5 x 10 x 30 mm^3

SciRod (Erlangen) cont'd

More Time Resolutions (1)

Scintillator 5 x 5 x 120 mm^3

Scintillator	MPPC	left		center		right
		σ_t	σ_t	σ_t	σ_t	σ_t
BC408	S10362-100P	88		94		101
	S10362-100P(x10)	71		77		74
	S12572-050P	72		77		74
BC420	S12572-015P	60		108		63
	S12572-050P	50	79	74	57	52

Scintillator 5 x 10 x 120 mm^3

Scintillator	MPPC	left		center		right
		σ_t	σ_t	σ_t	σ_t	σ_t
BC408	S10362-100P	88	116	132	98	93
BC420	S10362-100P	75		121		82

BC420 scintillator provides better results than BC408

SciRod (Erlangen) cont'd

More Time Resolutions (2)

Scintillator 5 x 5 x 50 mm^3

Scintillator	MPPC	left		center		right
		σ_t	σ_t	σ_t	σ_t	σ_t
BC408	S10362-100P	68		103		74
	S12572-050P	74		67		68
BC420	S12572-050P	78		64		51

Scintillator 5 x 10 x 50 mm^3

Scintillator	MPPC	left		center		right
		σ_t	σ_t	σ_t	σ_t	σ_t
BC408	S10362-100P	113		123		92

Scintillator 5 x 5 x 170 mm^3

Scintillator	MPPC	left		center		right
		σ_t	σ_t	σ_t	σ_t	σ_t
BC408	S10362-100P	88	85	129	85	99

Longer and wider rods tend to give worse time resolution

SciRod Summary

- Various geometry tested. Convincingly better.
- Gives better results primarily due to better light collection.
- Time resolution 50-100 ps.
- shorter, narrower geometry preferred.
- Different $\Delta\theta$, $\Delta\phi$ granularity
  - position resolution 13mm. Actually better.

Serial / Parallel connection of SiPM

relatively new technique to increase effectively the sensitive area of SiPM (typically 3x3mm^2)

serial connection

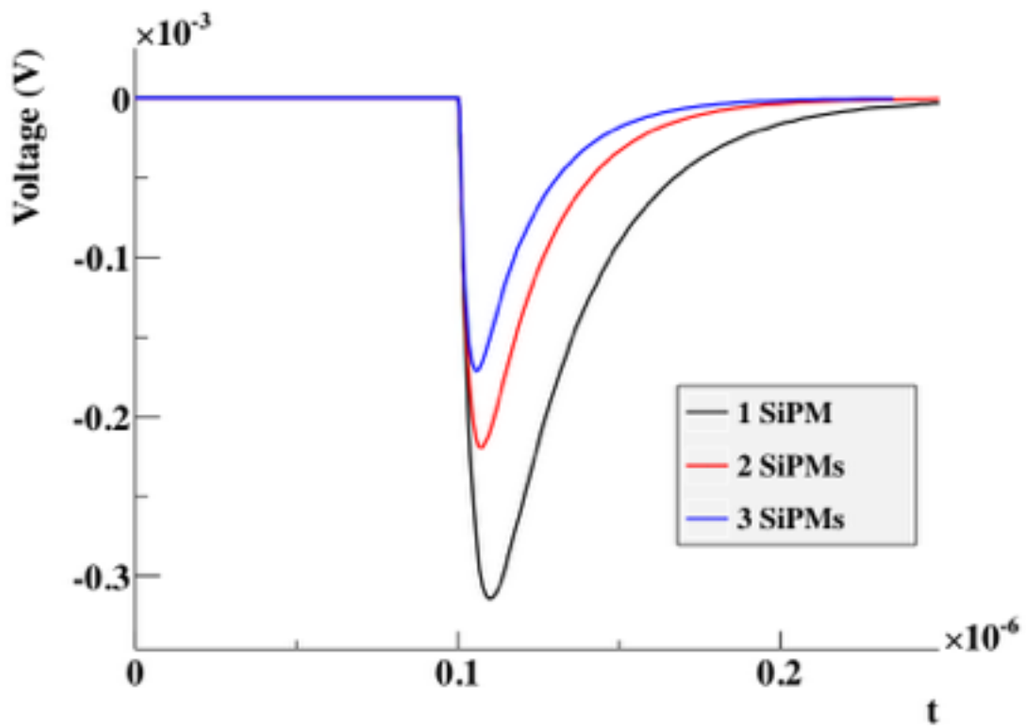

more sensors, less capacity

parallel connection

M. Nishimura, M. thesis (2014)

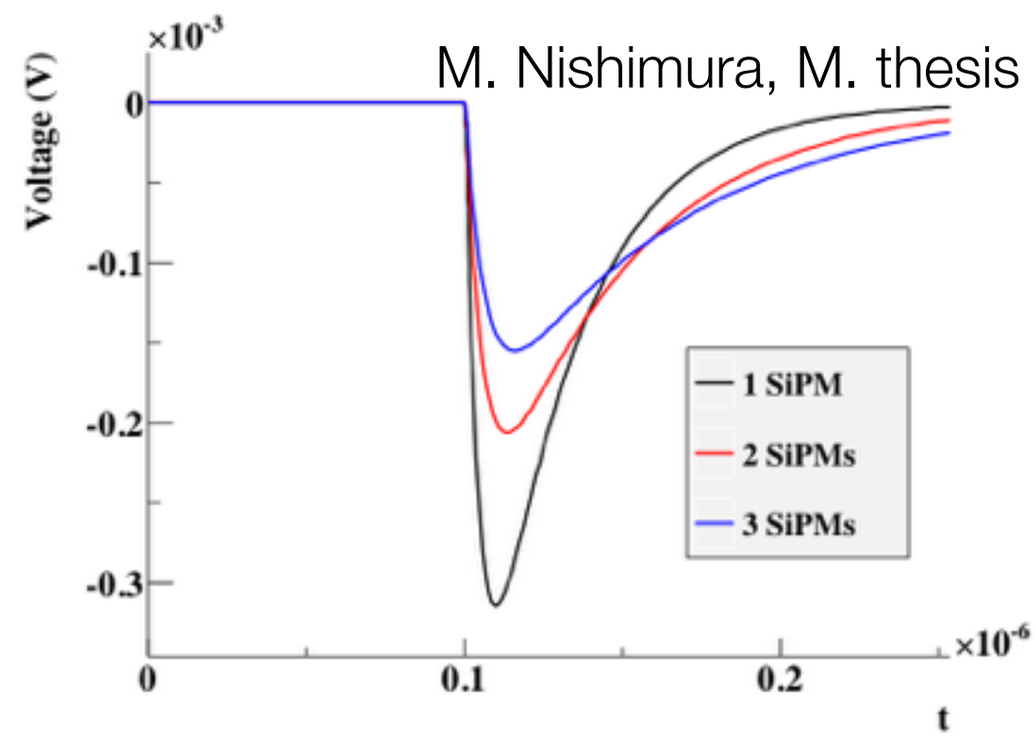

more sensors, more capacity

For timing purposes, a serial connection is preferred

MEG2 Scintillator Tile Detector

- While staying at PSI in October 2014, I had a chance to visit the MEG experiment at πE5 beamline, where they were having a test beam time of their new ToF Barrel.

- Their ToF Barrel (e.g. arXiv:1301.7225) has a similar concept as the PANDA SciTil and showing a good performance (Δt~60ps).

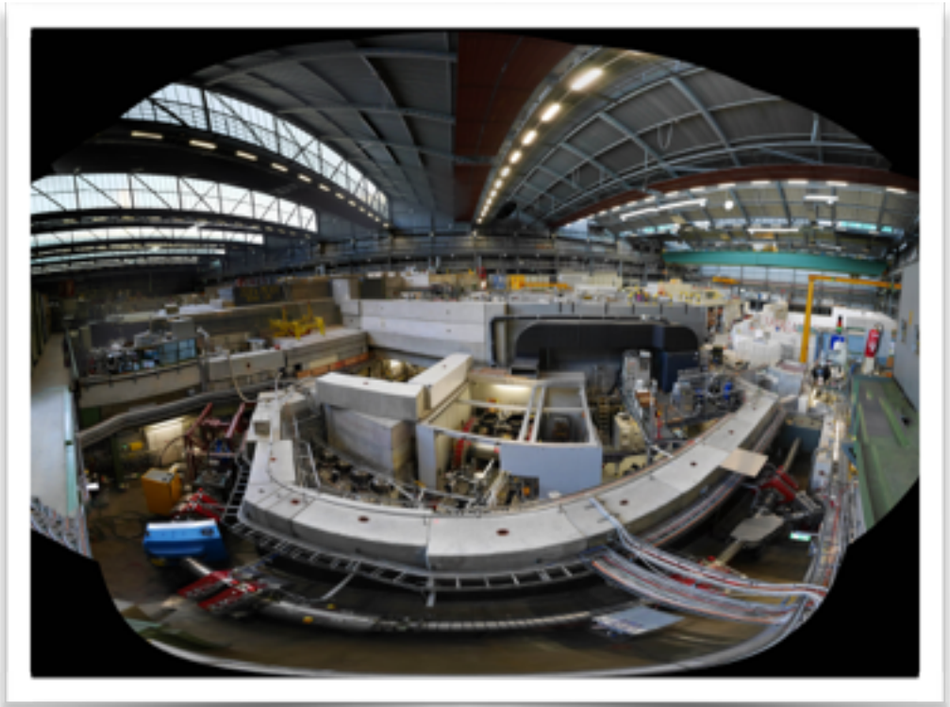

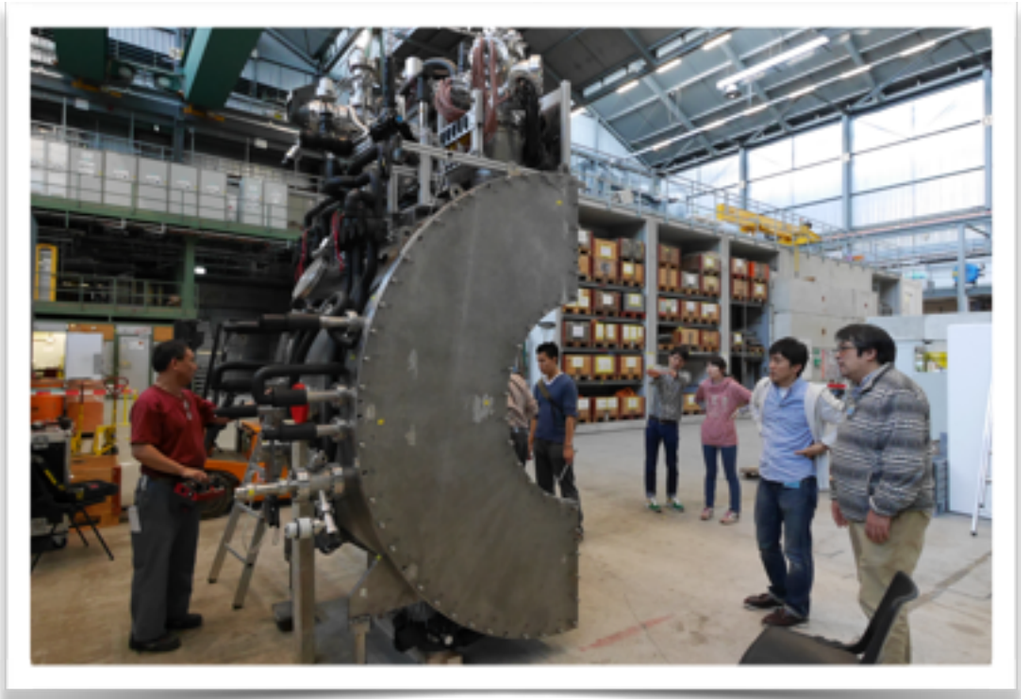

- They use scintillator EJ-232 (**BC-422** equivalent) of **40x120x5 mm^3** dimension.

- 6 SiPMs in **serial connection** covers one side of 40x5 mm^2 surface. Another chain of 6 SiPMs covers the other side. In total 12 SiPMs per tile.

- **PCB multichannel "cable"**

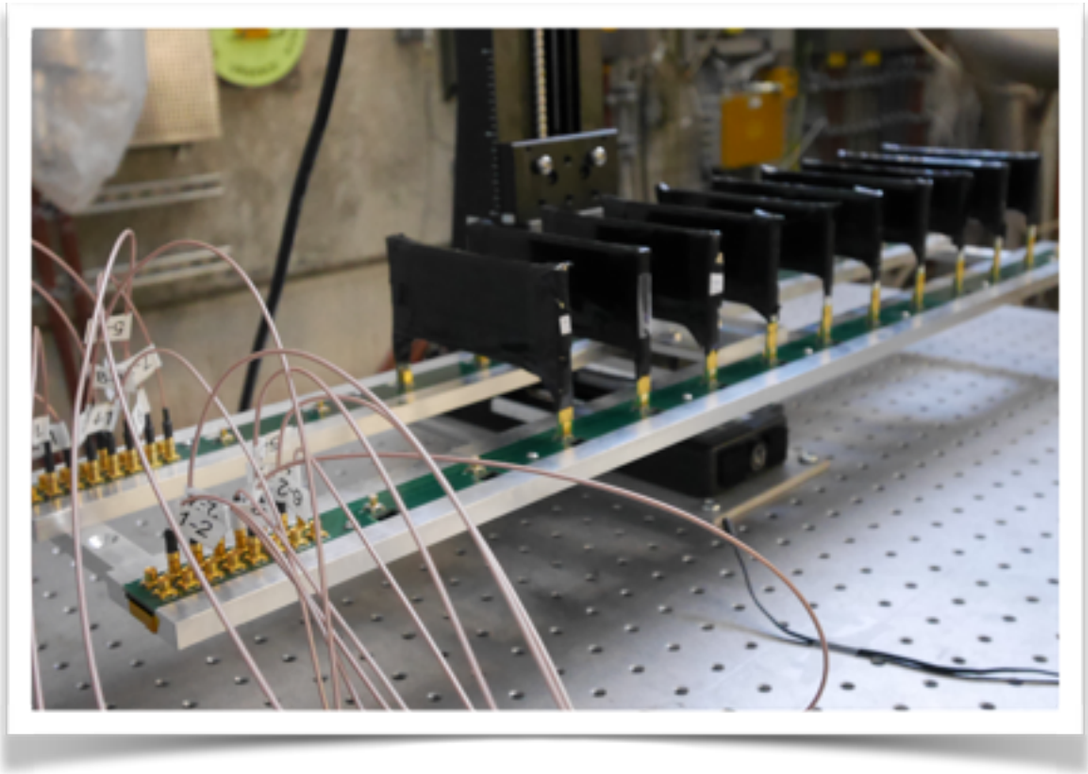

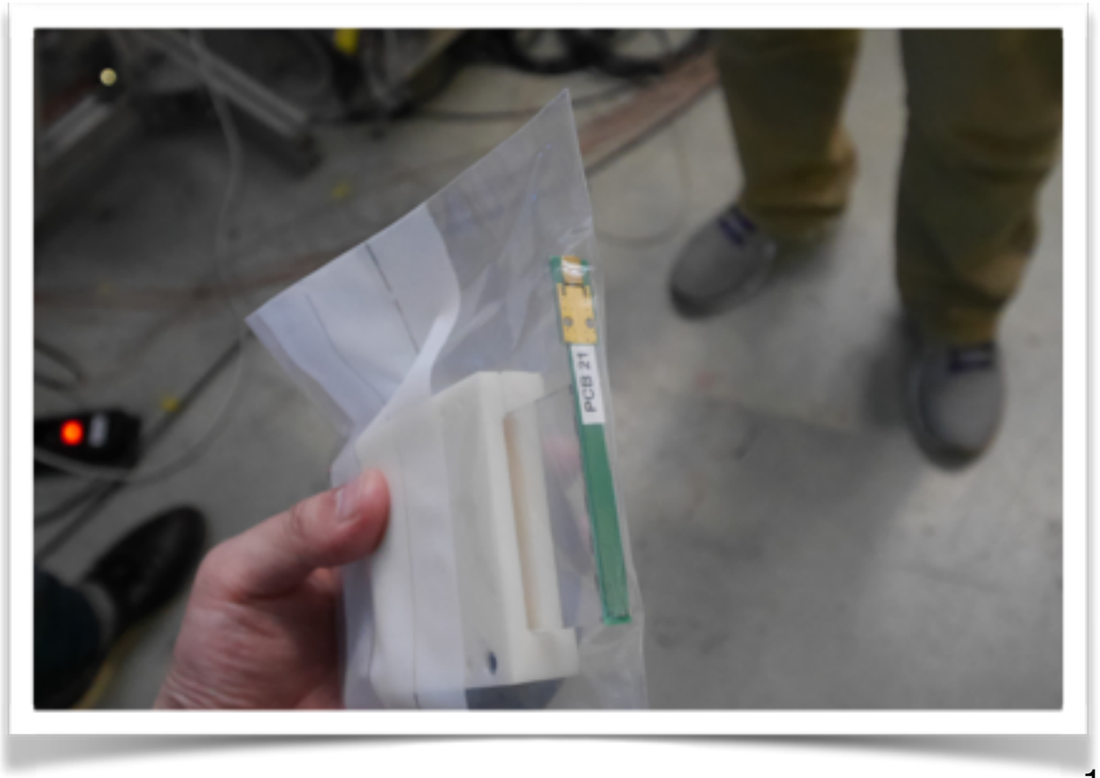

- They are using the FBK SiPM. That action is pushed by their Italian colleagues who'll finances the sensors. The detector R&D is lead by Japanese group.

- They (also) say Hamamatsu MPPC is better. Though they also agreed on our result that KETEK is superior in terms of time resolution, the overall performance of MPPC is better.

- One clear push to go to FBK device is the price. It's around 10€/piece.

- They guessed a single sensor price on a massive quantity order (e.g. PANDA SciTil) could drop to an order of 1€/piece!! (not confirmed by the company)

- A big impact on the cost estimation because of
  - cheaper sensor price
    - 1x12=12€ ?? instead of 2x30=60€
  - larger dimension of single tile. less number of channel needed
    - 30x30 mm^2, 6000 tiles
    - 120x40 mm^2, 1125 tiles

- The signal without amplification is fed to a voltage amplifier over 6-7m coax cable,
- then DRS4 chip i.e. waveform digitizer (e.g. CAEN V1742)

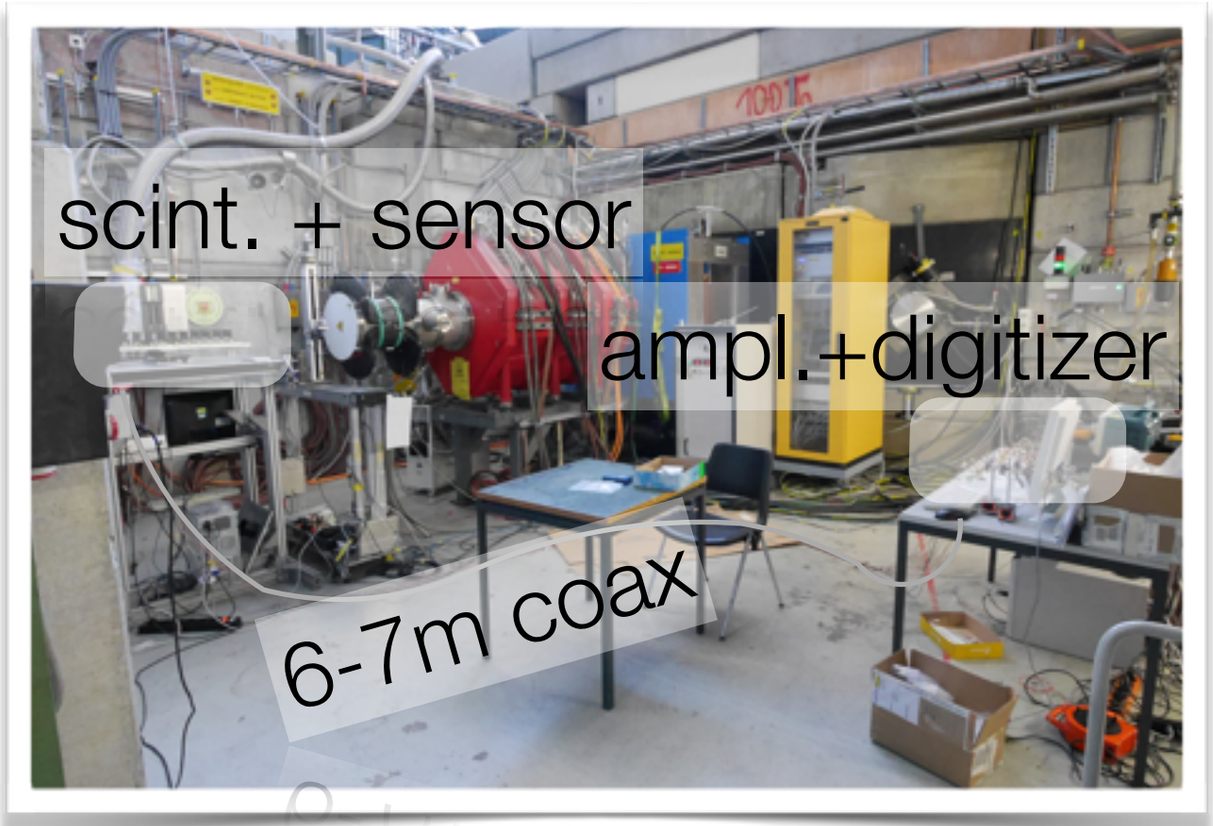

FEE Design

Status

- with Mainz group (C. Sfienti, M. Hoek)
- Working on concept
- Testing the TOF-PET chip
  - An evaluation kit of TOF-PET chip originally purchased by Carsten/Herbert
  - 64ch/chip
  - rate capability: 100 kHz = 10 μs?

Evaluation kit

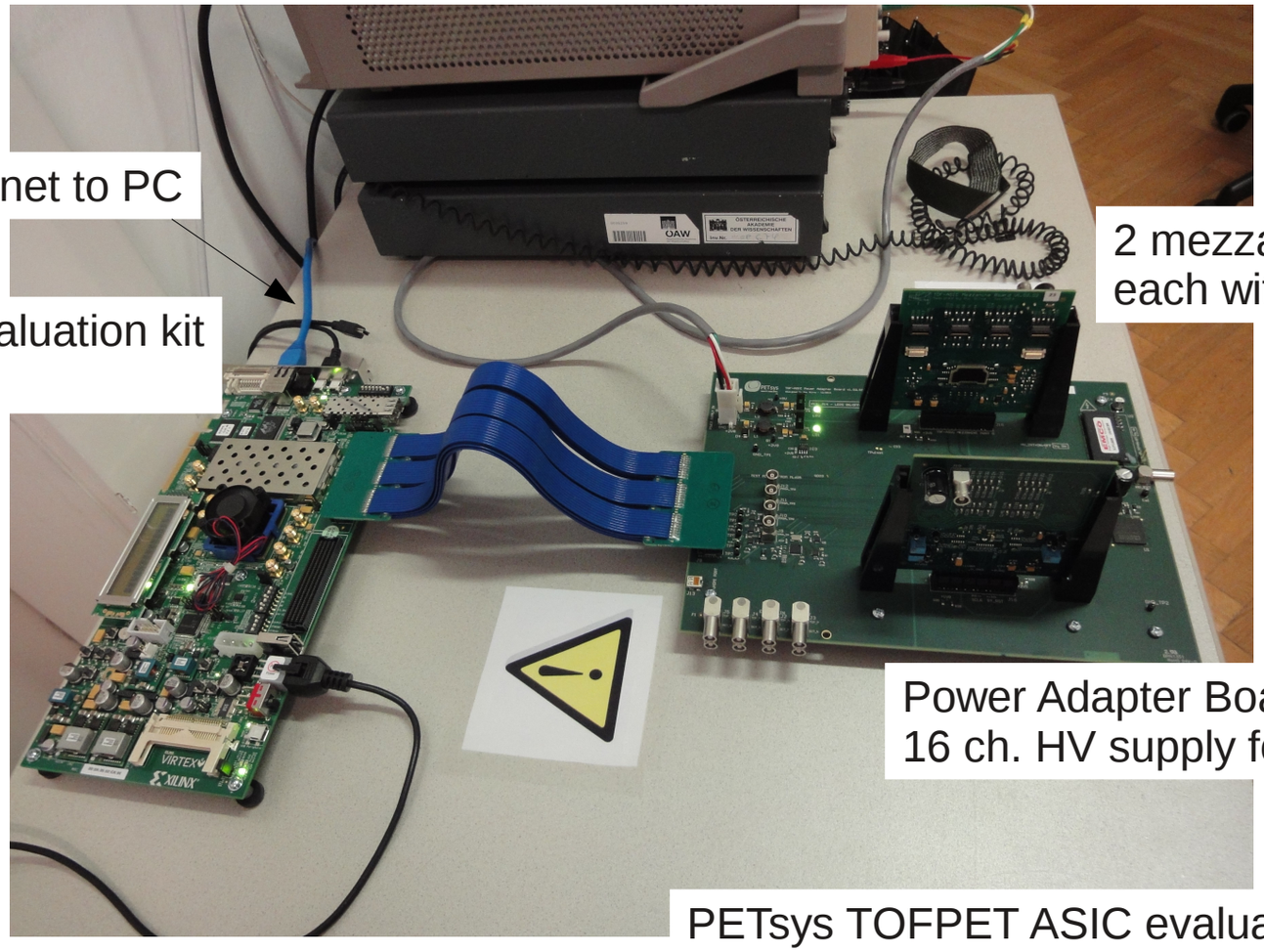

320 MHz clock

The PAB should receive a 320 MHz clock from the FPGA

Clock signal measured at the PAB:

320 MHz

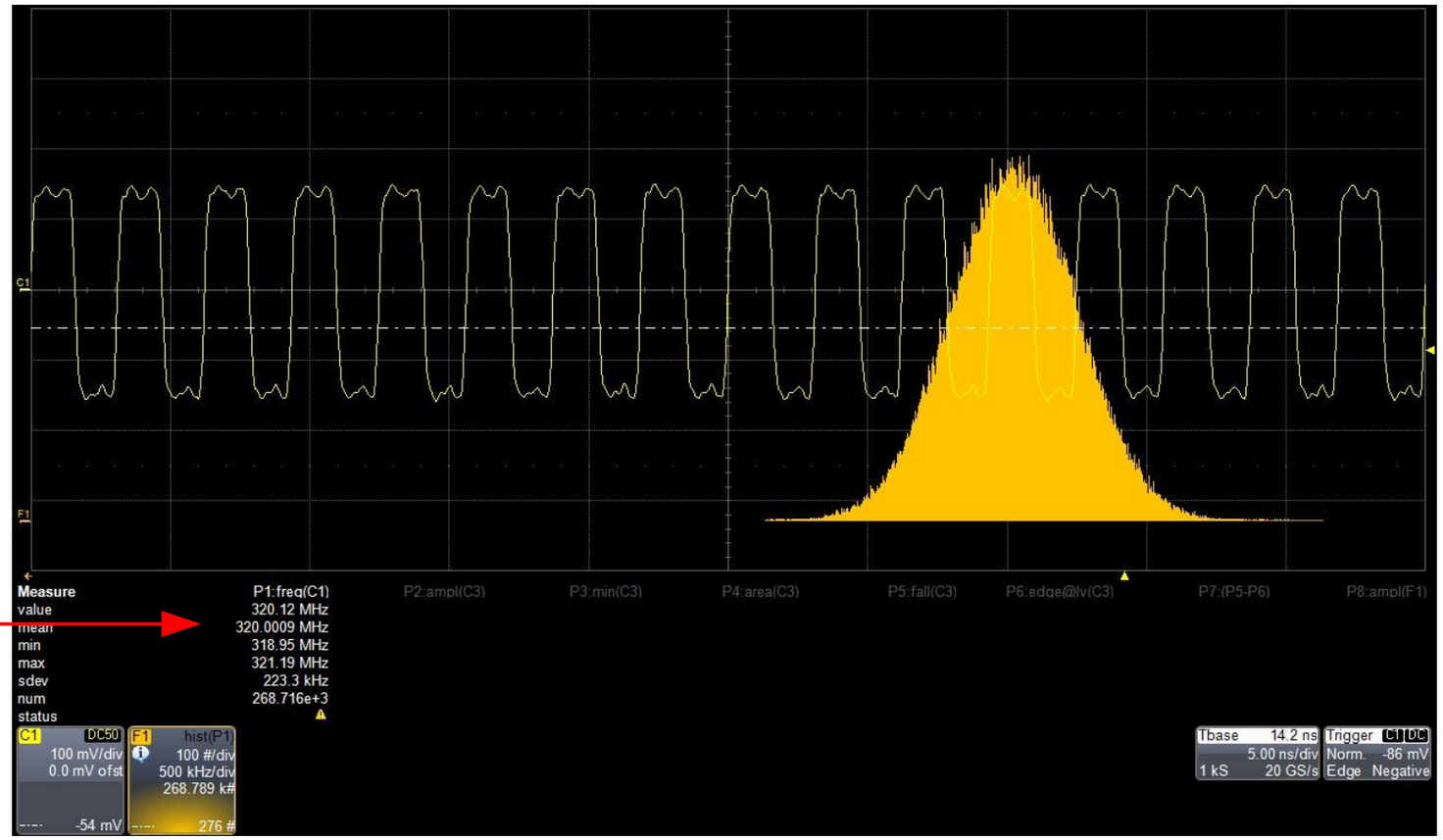

→ **Communication between FPGA and TOFPET works**

HV supply

- The PAB has an internal HV supply module which can be controlled via the FPGA
- The HV DAC has to be calibrated by comparing the set voltage (V_{set}) and the actual voltage (V_{meas}) at the output of the mezzanine bords
- Shows again that communication works

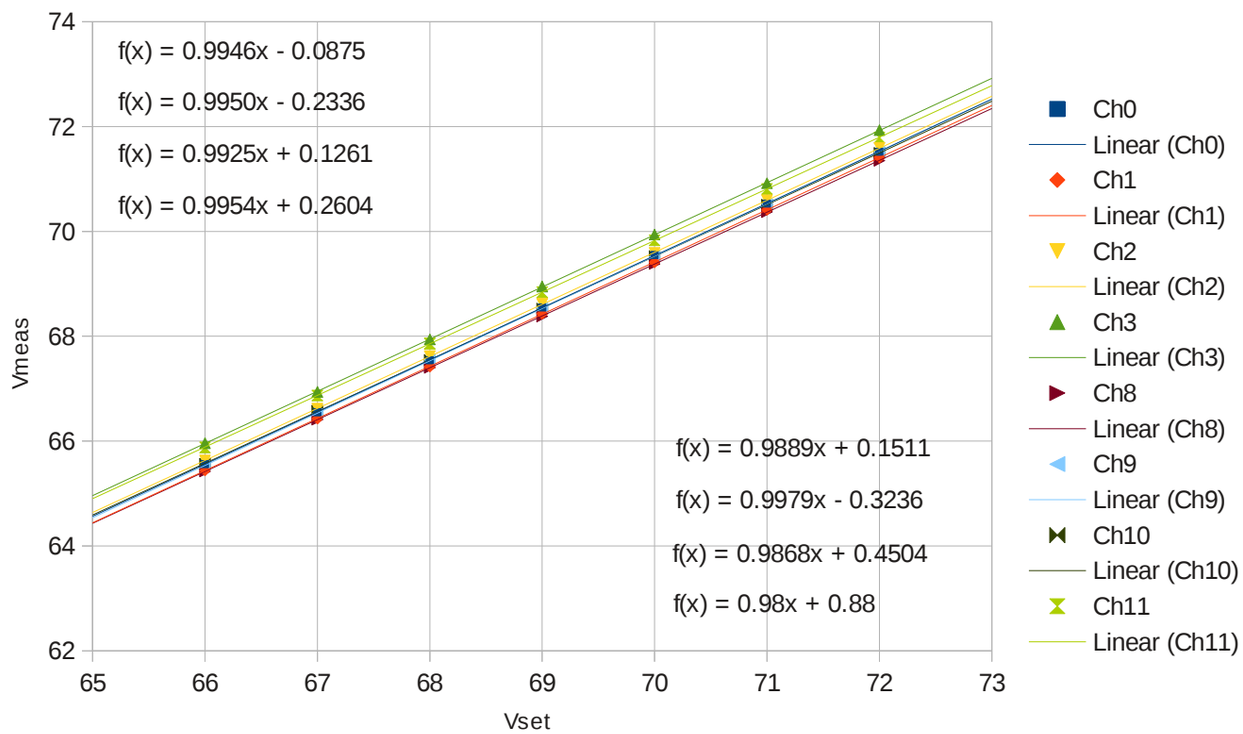

Simple linear regression:

$$V_{meas} = m \times V_{set} + b$$

Parameters m,b are used to produce a calibration file and calibrate the HV DAC.

Drawback of larger tile: Pile-up

SciMeg

- Meg area: 43 x 120 mm²
- Relevant modules: 507

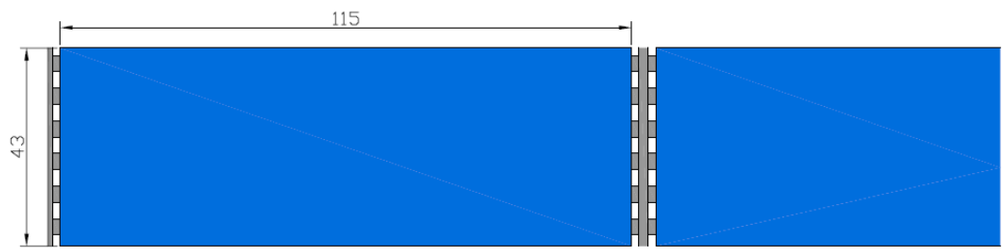

		Per event (n = 2)	Navg=20 MHz		Nmax=100 MHz	
			0,5 µs (n=20)	10 µs (n=400)	0,5 µs (n=100)	10 µs (n=2000)
	SciMeg A= 43 x 115 mm² , relevant modules = 507					
without geometry	$P_{Multihit}$	0.0004 %	0.072 %	18.72 %	1.69 %	90.45 %
	Efficiency	99.90 %	98.15 %	69.21 %	90.84 %	24.86 %
with geometry	$P_{Multihit}$	0.0003 %	0.0507 %	14.19 %	1.210 %	84.15 %
	Efficiency	83.57 %	82.34 %	61.26 %	77.15 %	24.41 %

Comparing different geometries

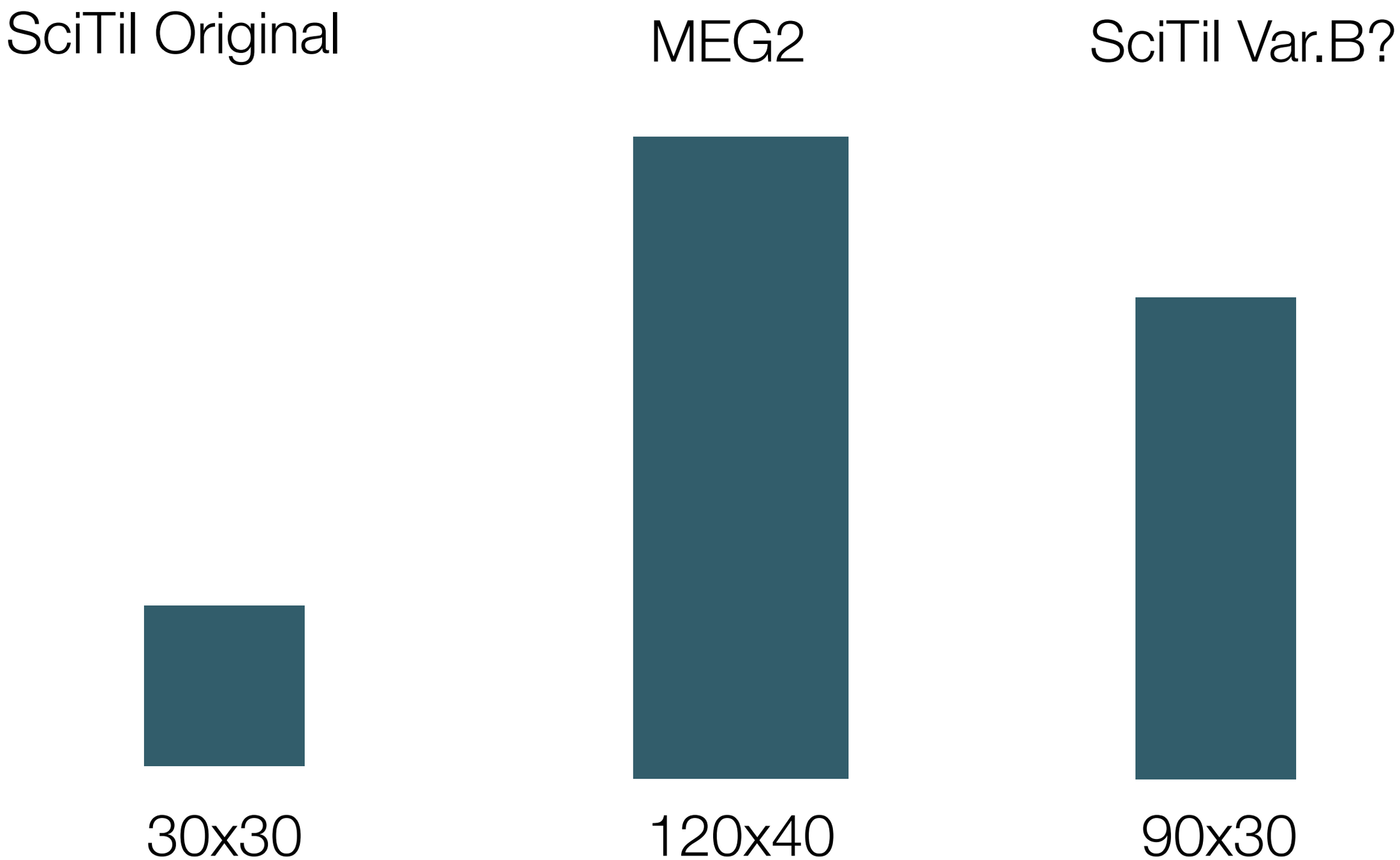

FEE possible configuration

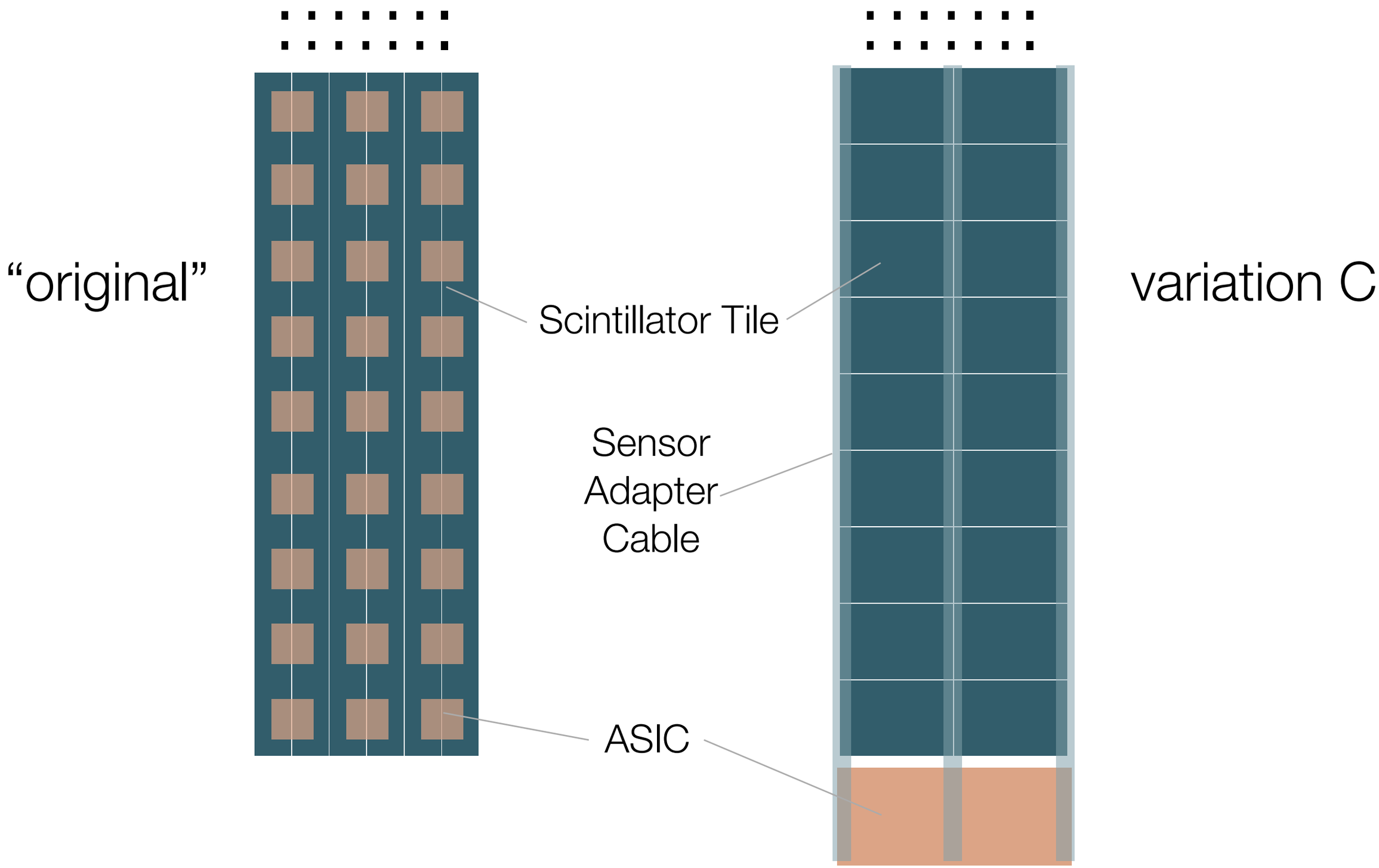

Summary and Outlook

- SciTil group working FEE status: working on concept
- TOF-PET in consideration, good feeling, though
  - time resolution including the sensor not yet tested
  - deadtime too long?
  - (channel density too high?)
- TOF-PET2?