The HitDetection V 1.00 Prototype

Holger Flemming, Harald Deppe, Sven Löchner,
Peter Wieczorek

9.4.2015

Outline

Motivation

Analogue Front End
- Block Diagram
- Sampling
- ADC

Digital Logic
- Write Logic
- Analogue Memory Read out Logic
- Back end and Data Acquisition Interface

Layout

Status

Motivation

HitDetection V1.00 as a Prototype

- Proof of concept
- Set up of a *Demonstrator*
  - Evaluation-setup for PANDA EMC
  - Any other application
- Test circuit for some universal building blocks
  - 12 Bit Pipeline ADC
  - Input buffer
  - Analogue memory
  - Digital components

Analogue Front end

Block Diagram

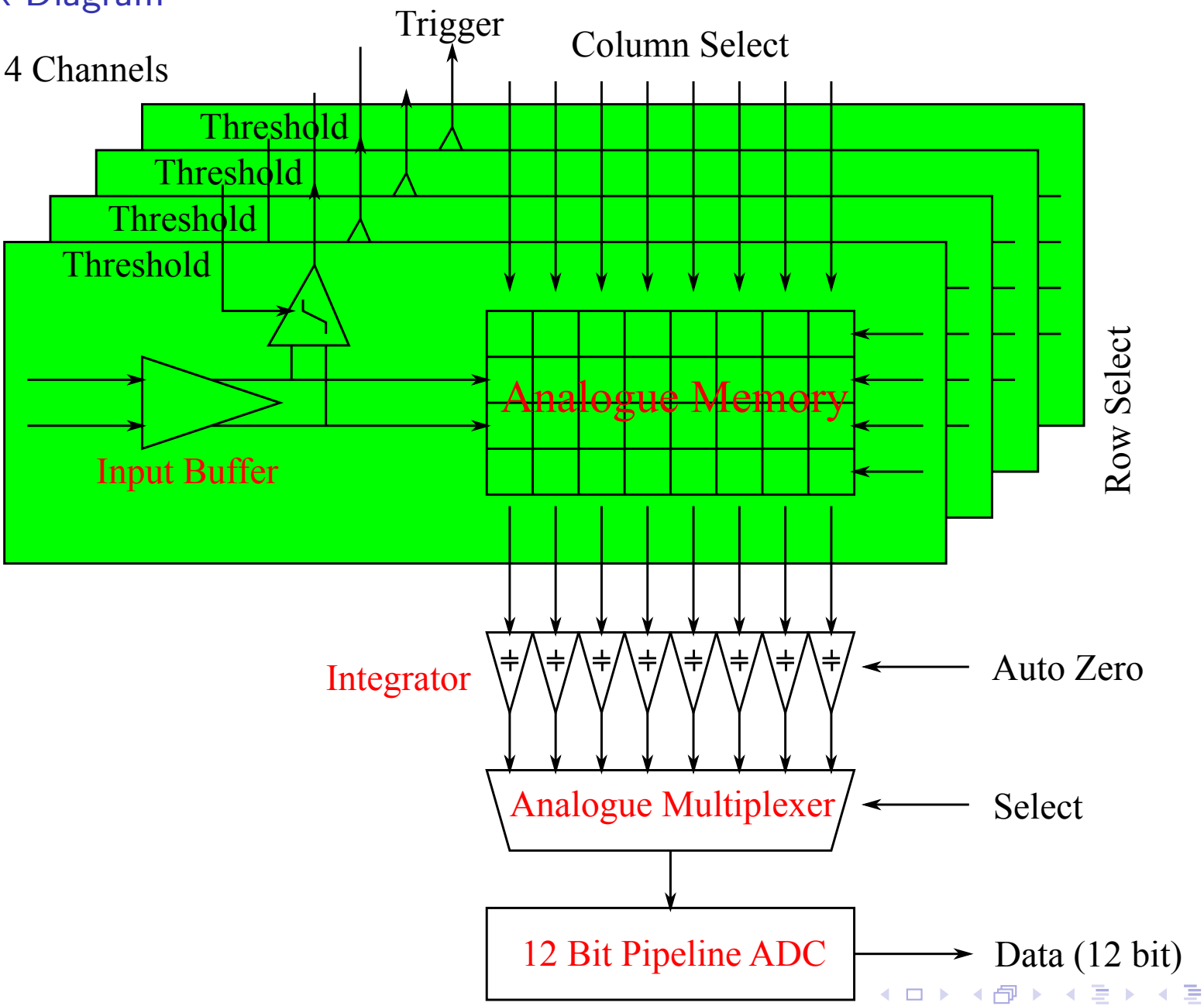

Analogue Front End

Sampling

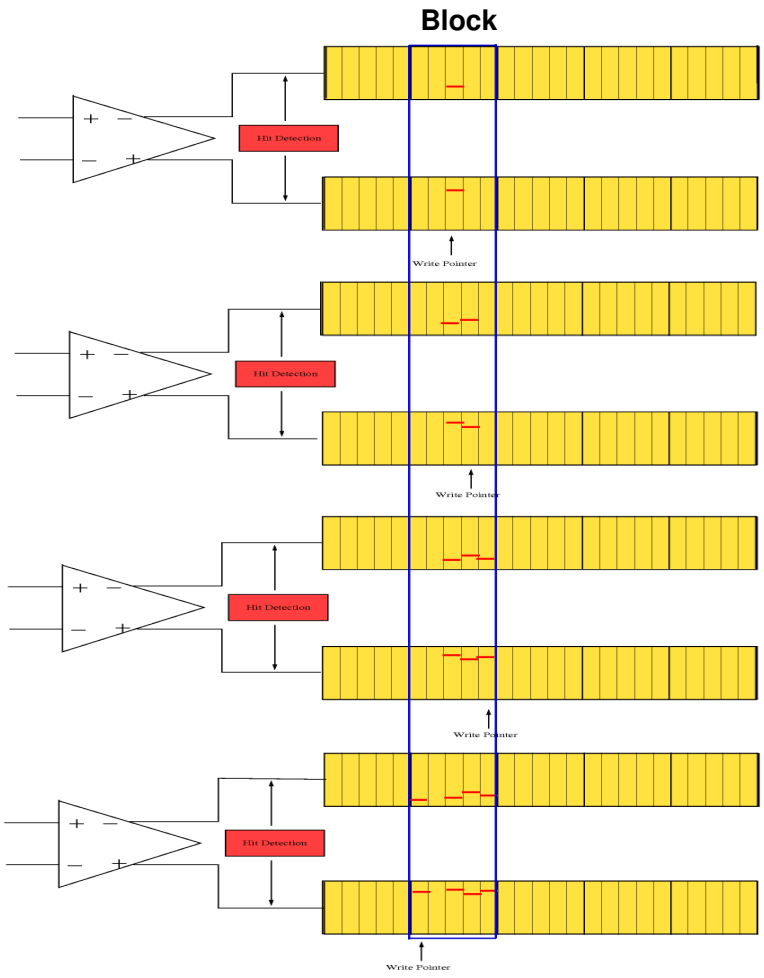

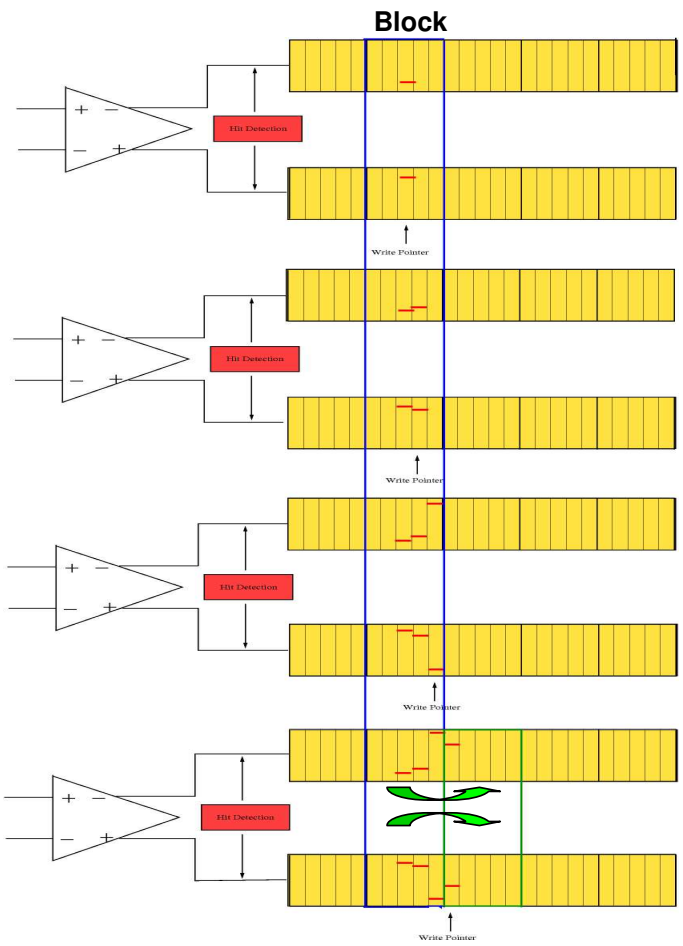

Analogue Front End

12 Bit Pipeline ADC

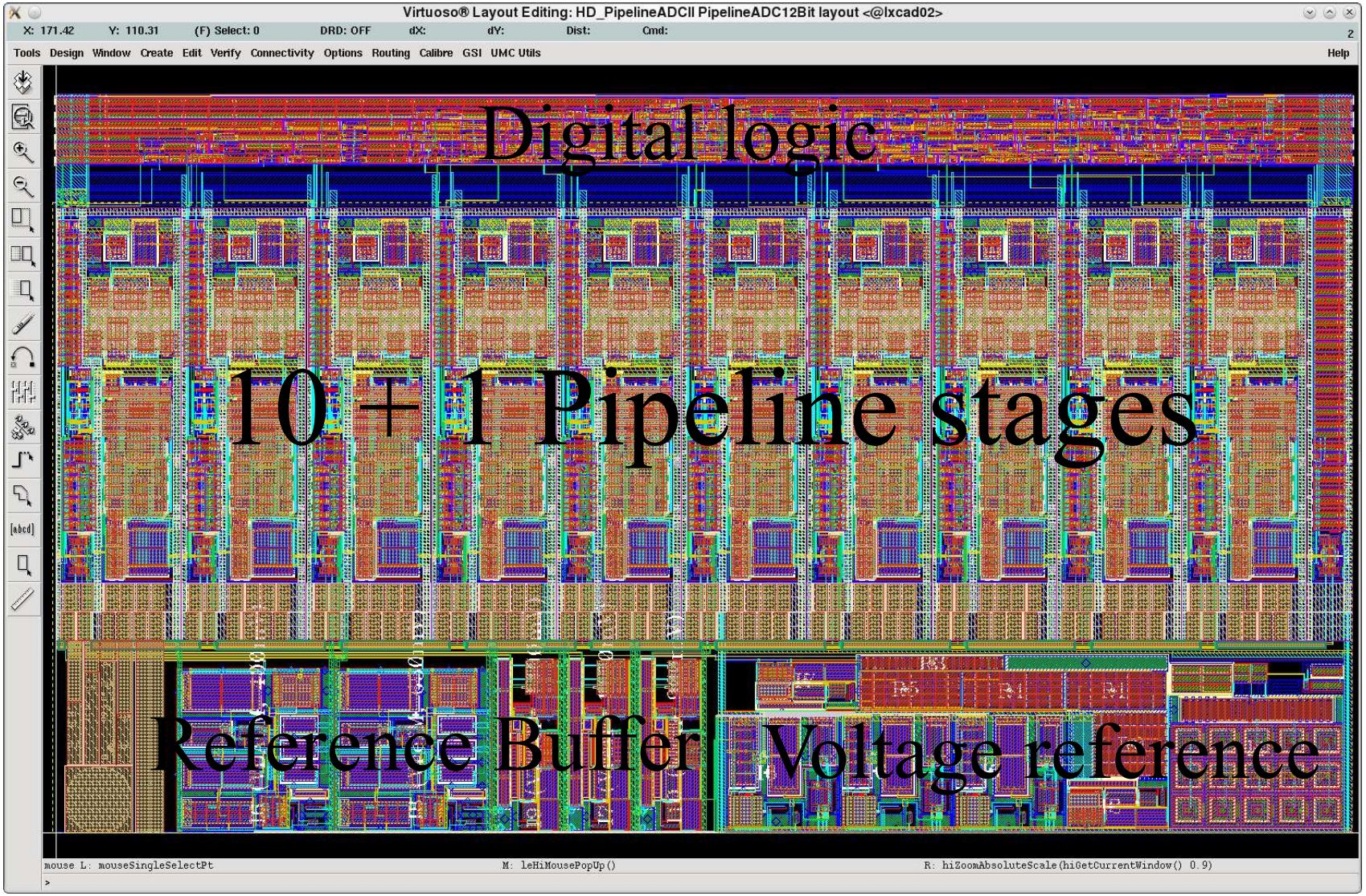

Digital Logic

Write Logic

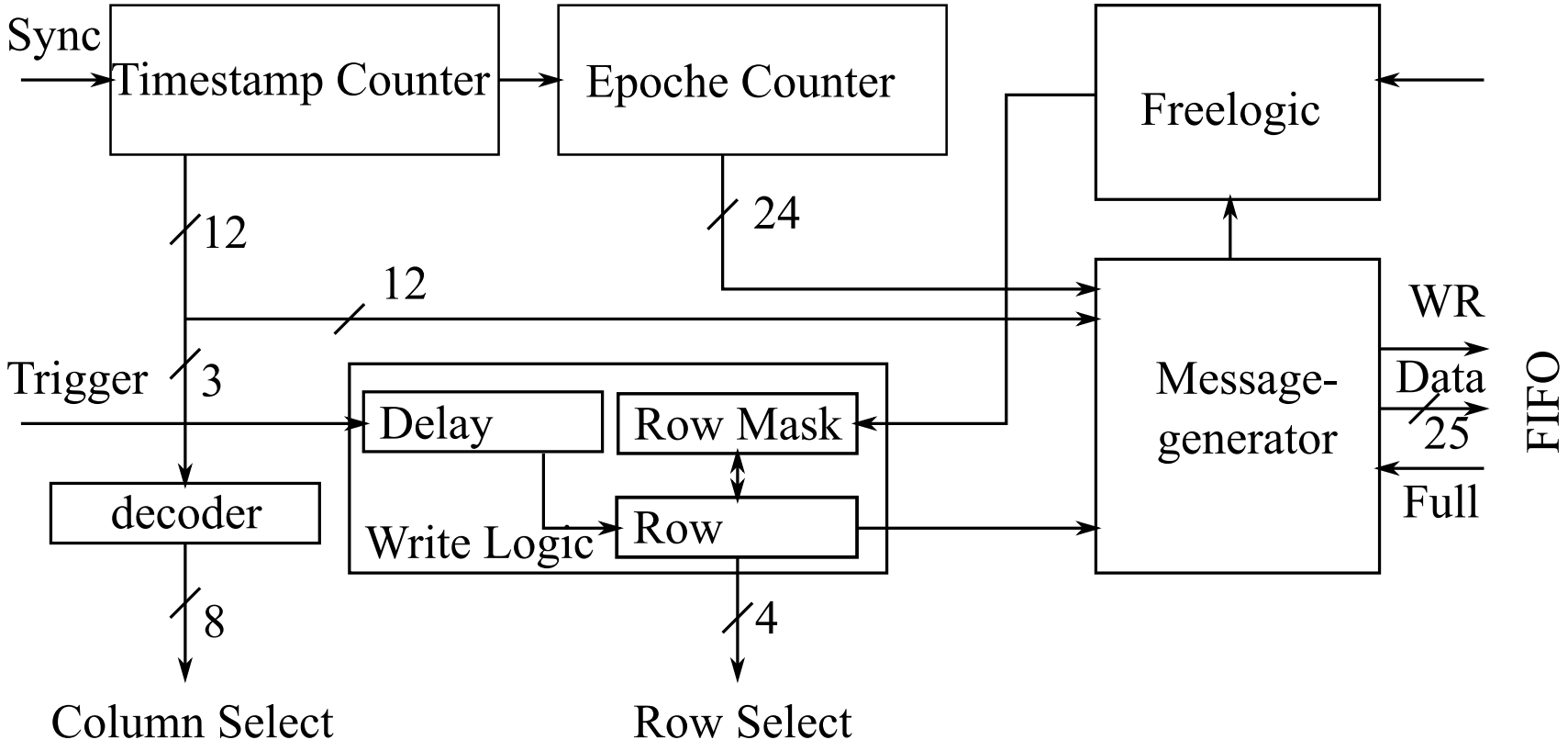

Digital Logic

Analogue Memory Read out Logic

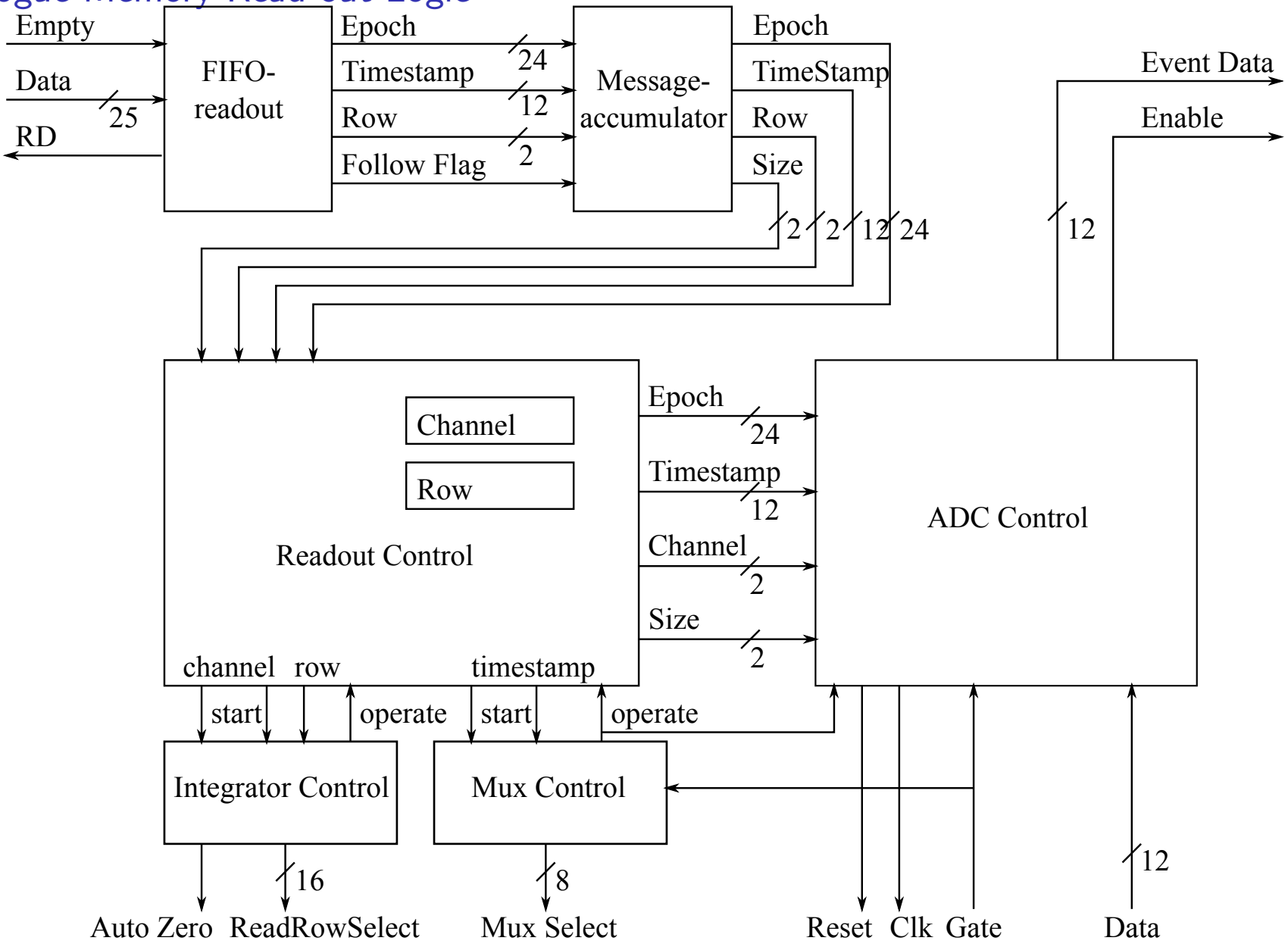

Digital Logic

Back end and Data Acquisition Interface

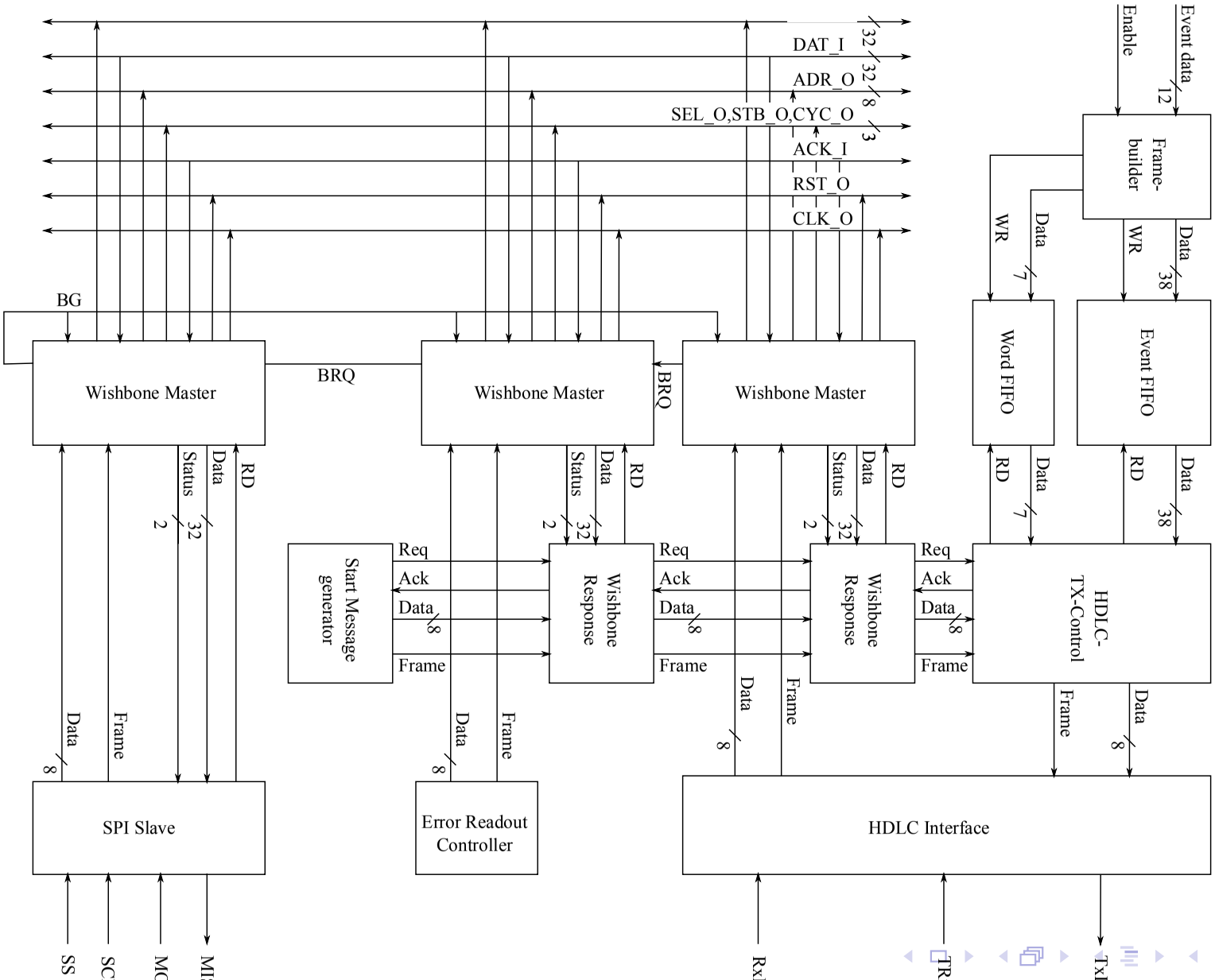

Layout

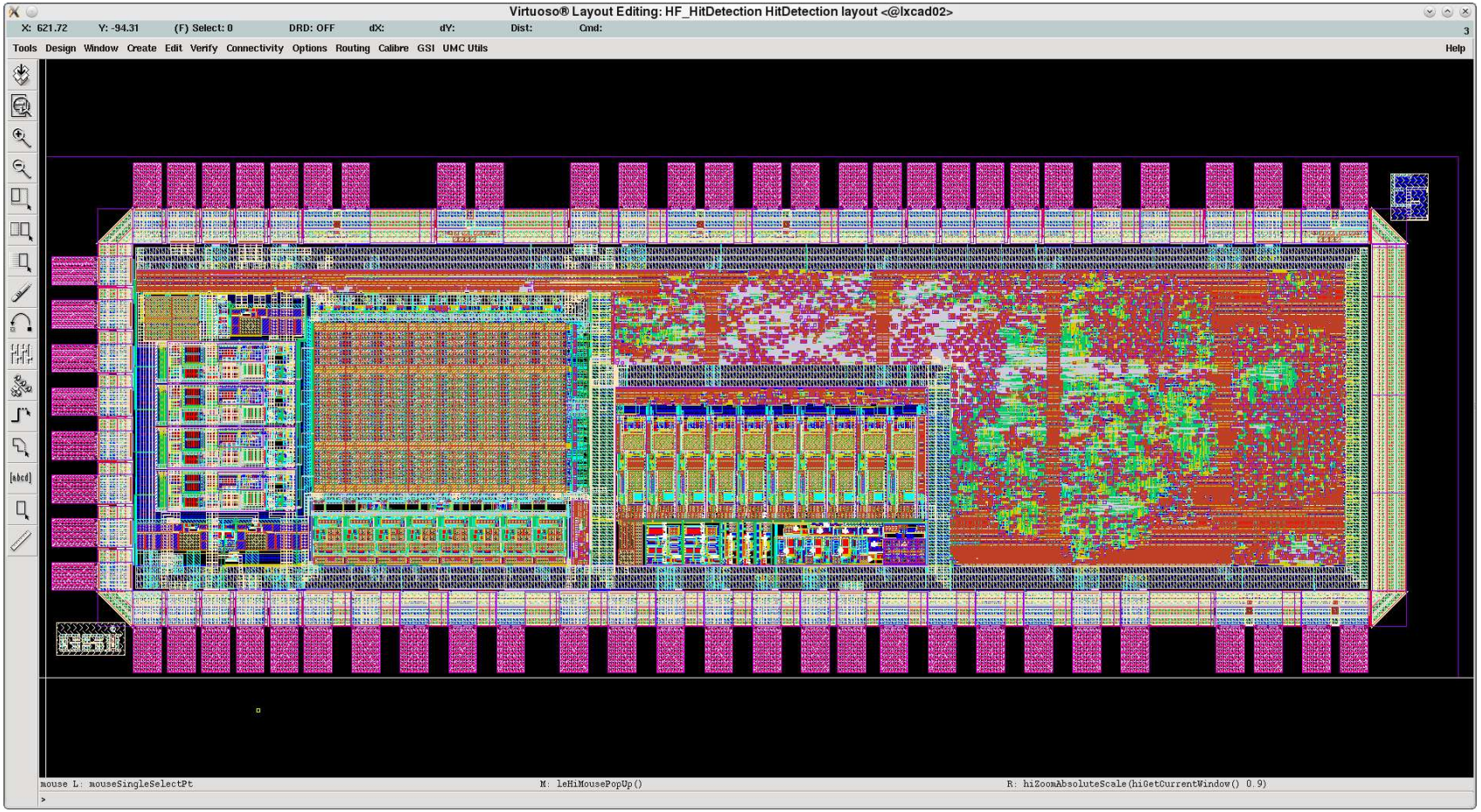
Virtuoso® Layout Editing: HF_HitDetection HitDetection layout <@lxcad02>
X: 621.72
Y: -94.31
(F) Select: 0
DRD: OFF
dX:
dY:
Dist:
Cmd:
Tools Design Window Create Edit Verify Connectivity Options Routing Calibre GSI UMC Utils
Help
mouse L: mouseSingleSelectPt
M: leHiMousePopUp()
R: hiZoomAbsoluteScale(hiGetCurrentWindow() 0.9)

Status

- ASIC: Delivered
- Test PCB: Delivered
  Test PCB with one APFEL ASIC as signal source and one HitDetection
- Next Steps:
  - PCB SMD assembly
  - ASIC assembly (Die bonding, wire bonding, glob top)
  - Installation of test setup
- First results expected for early summer

Thank you