Status on Prototyping for the Barrel EMC of the PANDA Detector

4th HIC for FAIR Detector Systems Networking Workshop, Gießen, 20-21 February 2014

Tobias Eißner, Daniel Bremer, Christoph Rosenbaum, Stefan Diehl, Till Kuske, Peter Drexler, Rene Schubert, Valera Dormenev and Rainer Novotny

University Gießen — 2nd Institute of Physics
and for the PANDA Collaboration

20.02.2014

Outline

The PANDA Detector

- Detector located in the HESR at the future FAIR facility
- Fixed-Target experiment with $\bar{p}$-beam ($1.5 - 15\,\frac{\mathrm{GeV}}{c}$) on p

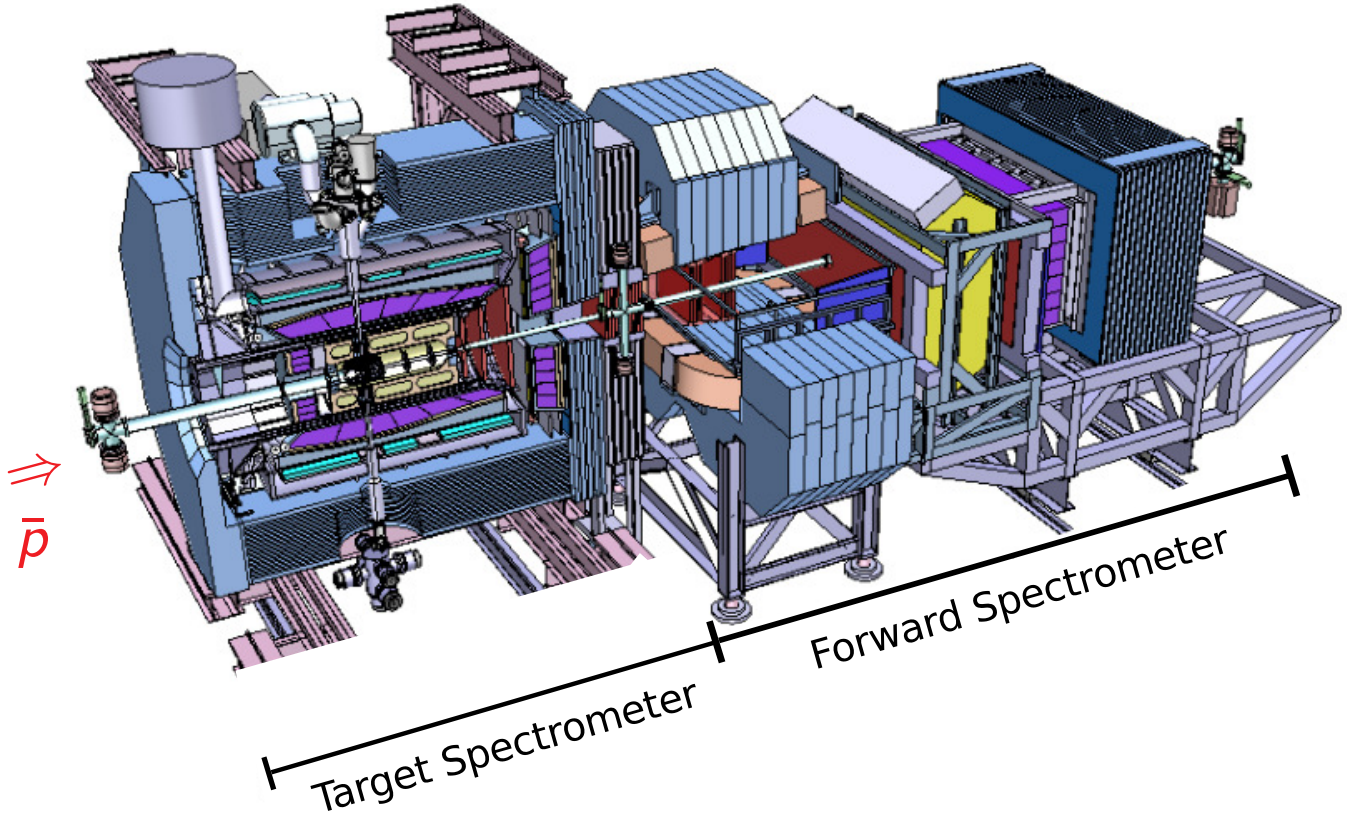

Reminder - The PROTO60

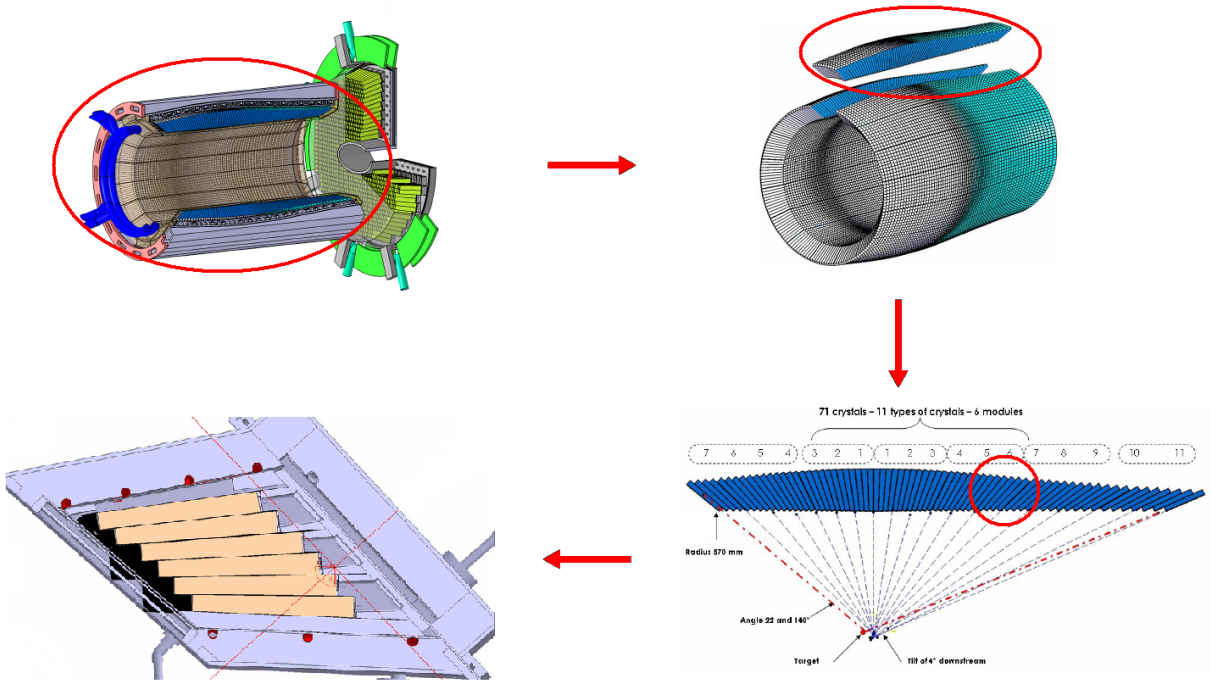

- Cooled down to $-25\,^{\circ}\mathrm{C}$
- Single APD readout with an effective area of $\sim 1\,\mathrm{cm}^2$ (quadratic) + Low-Noise low-Power charge preamplifier (LNP)

The PROTO60 - Back View

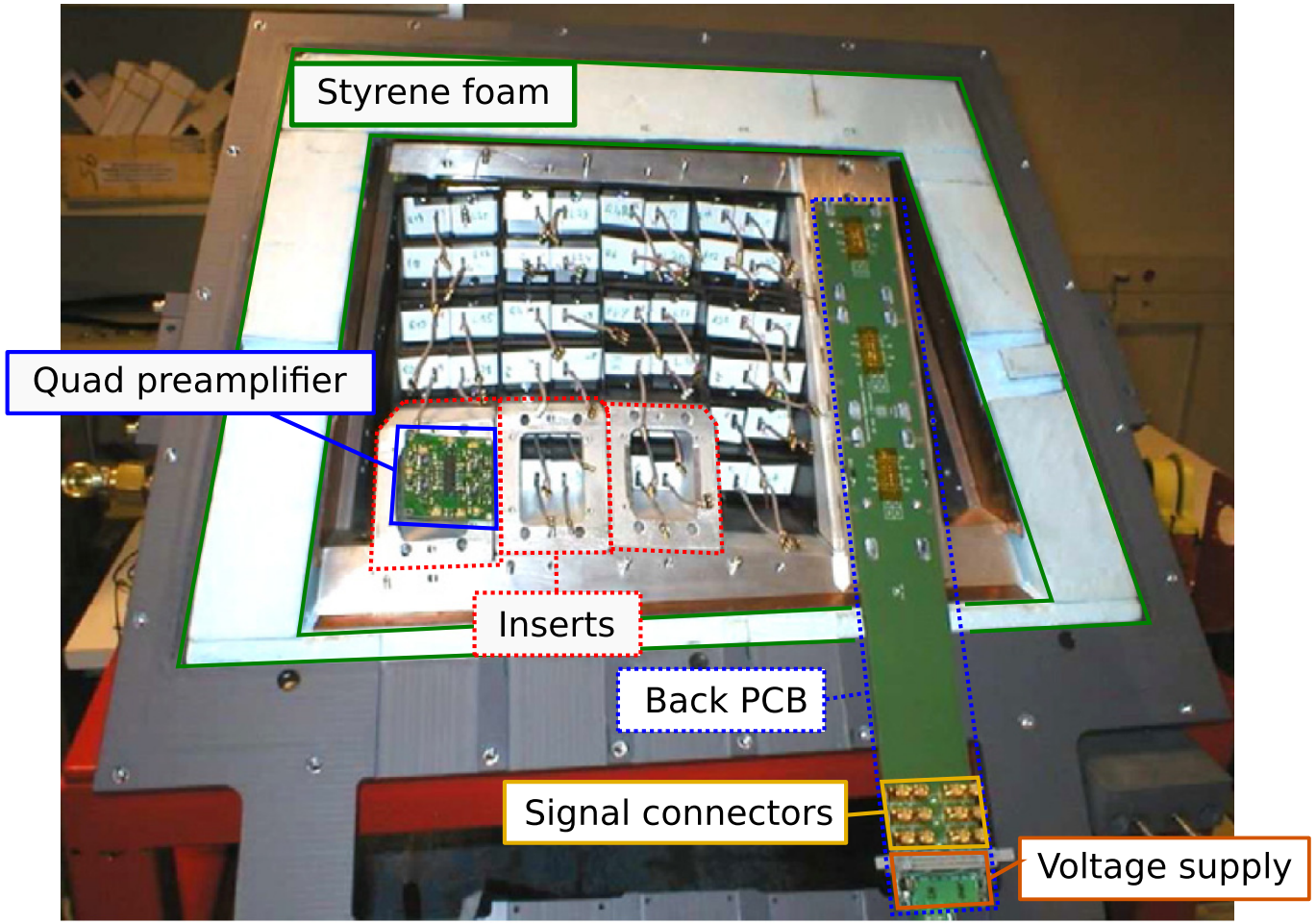

Beamtimes with the PROTO60

Facility	Beam	Energy Range	Readout
MAMI 2009	γ	150 - 1500 MeV	MSCF16 & PS-ADC (CAEN V785N)
MAMI 2010	γ	50 - 690 MeV	MSCF16 & PS-ADC (CAEN V785N)
CERN-SPS 2011[1]	e^+	15 GeV	SADC (SIS3302)
ELSA 2013	γ	0.7 - 3.2 GeV	SADC (SIS3302)

[1] With Si-Strip tracker

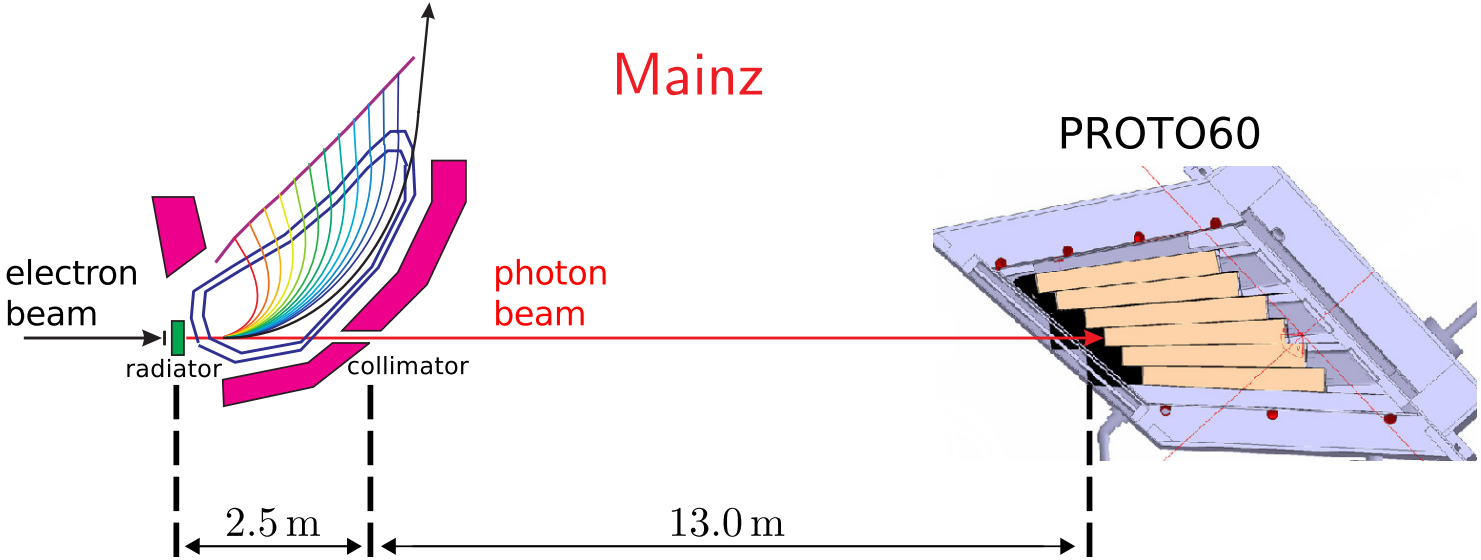

Beamtimes with the PROTO60

Facility	Beam	Energy Range	Readout
MAMI 2009	γ	150 - 1500 MeV	MSCF16 & PS-ADC (CAEN V785N)
MAMI 2010	γ	50 - 690 MeV	MSCF16 & PS-ADC (CAEN V785N)
CERN-SPS 2011[1]	e^+	15 GeV	SADC (SIS3302)
ELSA 2013	γ	0.7 - 3.2 GeV	SADC (SIS3302)

[1] With Si-Strip tracker

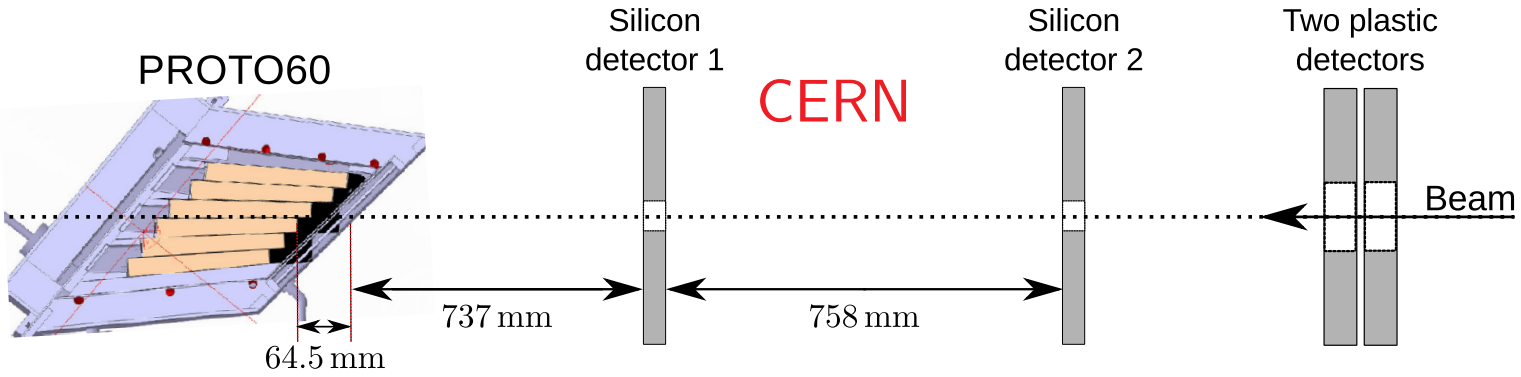

Beamtimes with the PROTO60

Facility	Beam	Energy Range	Readout
MAMI 2009	γ	150 - 1500 MeV	MSCF16 & PS-ADC (CAEN V785N)
MAMI 2010	γ	50 - 690 MeV	MSCF16 & PS-ADC (CAEN V785N)
CERN-SPS 2011[1]	e^+	15 GeV	SADC (SIS3302)
ELSA 2013	γ	0.7 - 3.2 GeV	SADC (SIS3302)

[1] With Si-Strip tracker

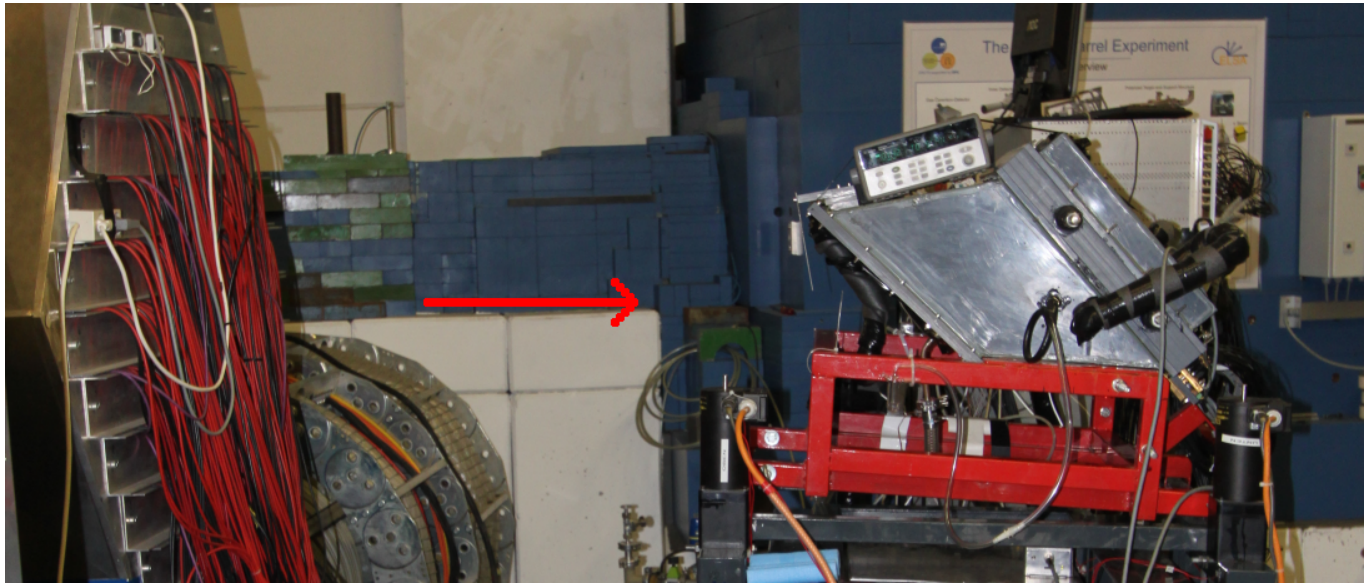

The Signal Treatment

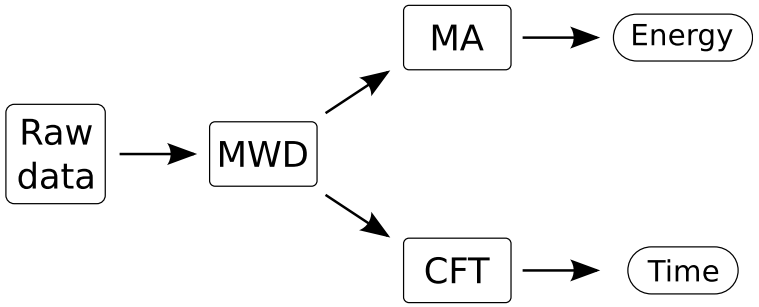

- Later on: Implementation to FPGAs
- Sampling rate 50 MHz $\Rightarrow$ 20 ns Binning

The Signal Treatment

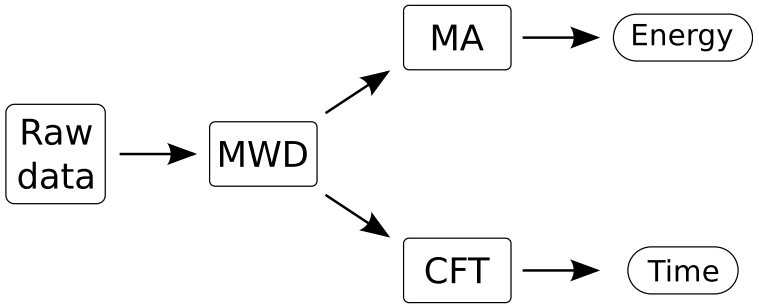

Raw

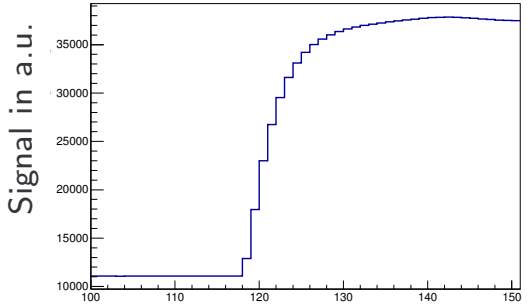

MWD

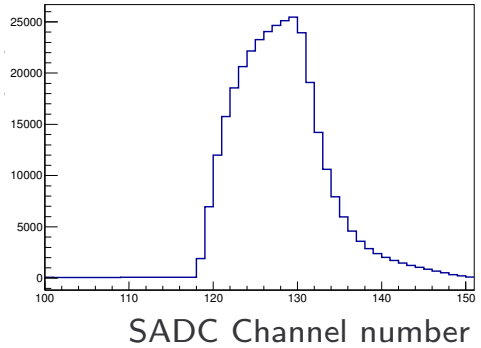

- Later on: Implementation to FPGAs
- Sampling rate 50 MHz $\Rightarrow$ 20 ns Binning

The Signal Treatment

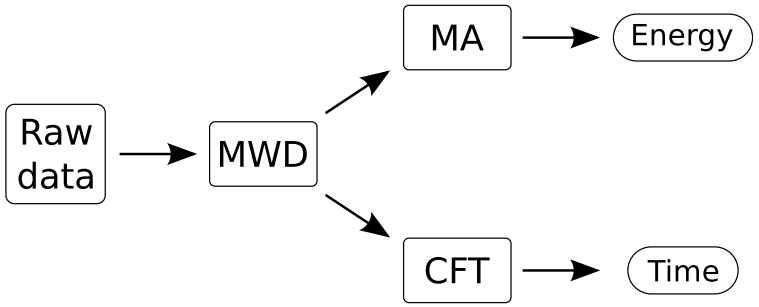

- Later on: Implementation to FPGAs
- Sampling rate 50 MHz $\Rightarrow$ 20 ns Binning

Raw

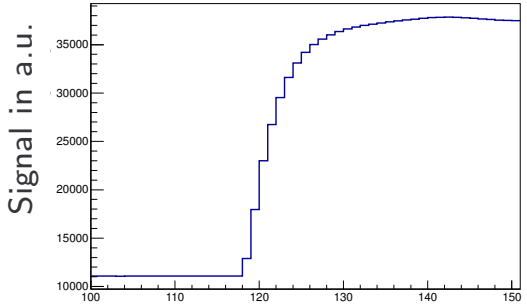

MWD + MA

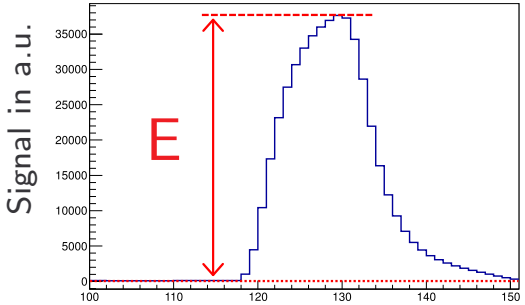

MWD

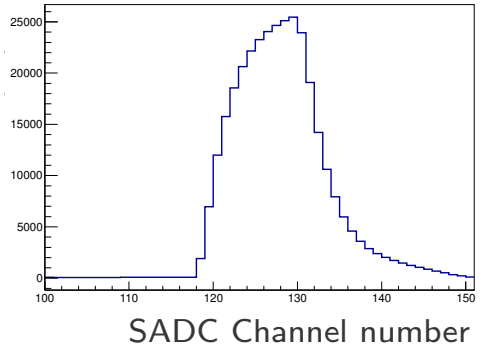

MWD + CFT

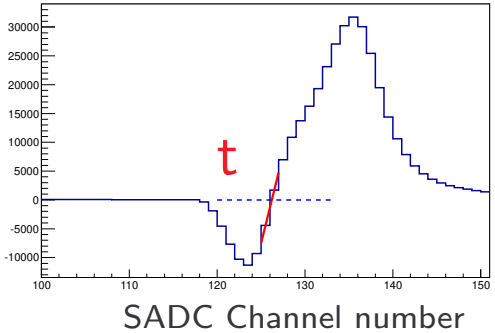

Energy Resolution

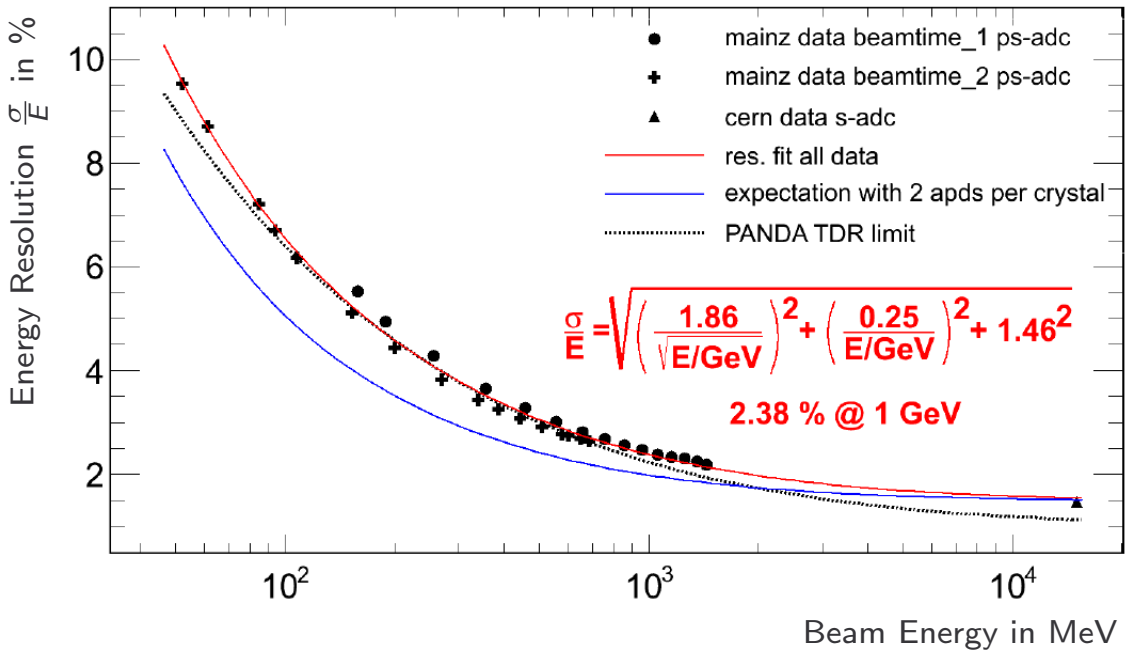

- PhD - Thesis of Markus Moritz

"Measurements and improvements of the response of the PANDA-EMC prototype PROTO60 to high energetic particles and photons in accelerator experiments"

Position Resolution @ CERN

Two methods of position reconstruction

$$x_{cg} = \frac{\sum_i w_i x_i}{\sum_i w_i} \;/\; y_{cg} = \frac{\sum_i w_i y_i}{\sum_i w_i}$$

Position Resolution @ CERN

Two methods of position reconstruction

$$x_{cg} = \frac{\sum_i w_i x_i}{\sum_i w_i} \;/\; y_{cg} = \frac{\sum_i w_i y_i}{\sum_i w_i}$$

1 **Linear weighting**: $w_i = E_i$

$\rightarrow$ subsequent S-curve correction

$$x_{\text{ref}} = x_c + b \cdot \text{arcsinh}\left(\frac{x_{\text{lin}} - x_c}{\Delta} \sinh \frac{\Delta}{b}\right)$$

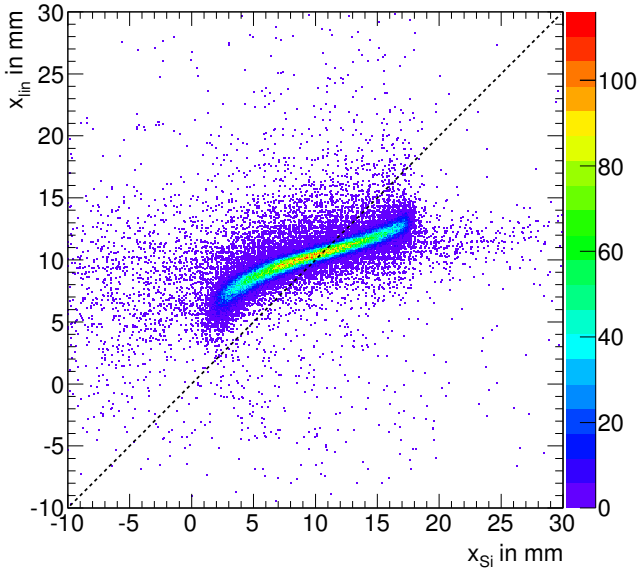

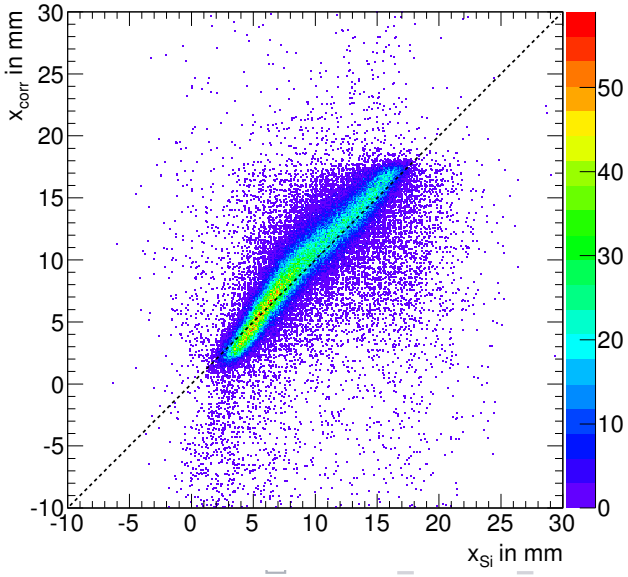

Position Resolution @ CERN

Two methods of position reconstruction

$$x_{cg} = \frac{\sum_i w_i x_i}{\sum_i w_i} \;/\; y_{cg} = \frac{\sum_i w_i y_i}{\sum_i w_i}$$

2 **Logarithmic weighting**: $w_i = \max\left\{0, W_0 + \ln\left(\frac{E_i}{E_T}\right)\right\}$
with $E_T = \sum_i E_i$

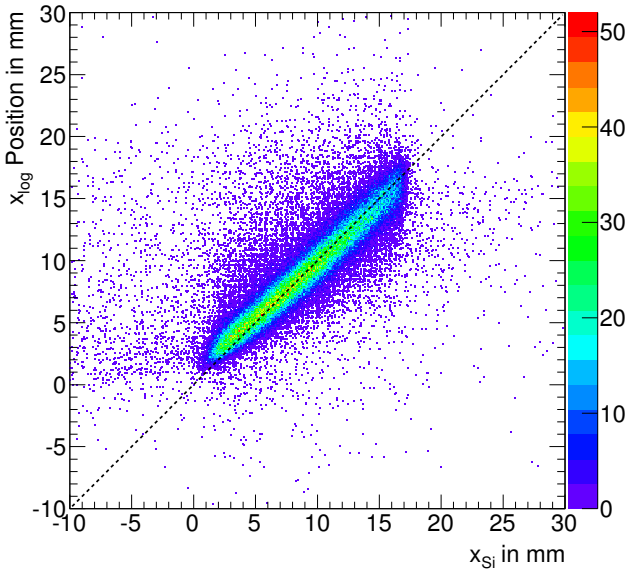

- PhD - Thesis of Daniel Bremer

"Measurements and Simulations on Position Dependencies in the Response of Single PWO Crystals and a Prototype for the PANDA EMC"

Time Resolution

- Set requirement: $E_{28} > E_{29} \cdot 0.9$ AND $E_{29} > E_{28} \cdot 0.9$

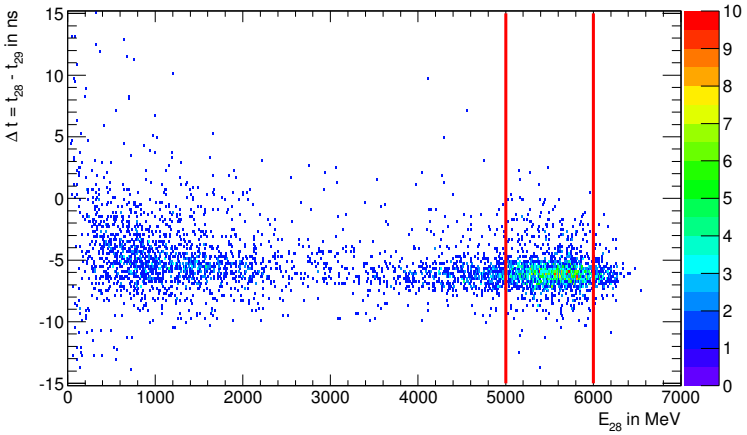

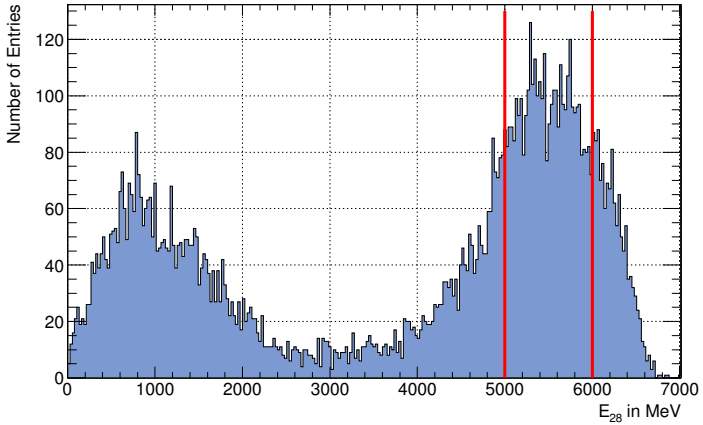

Time Resolution

- Set requirement: $E_{28} > E_{29} \cdot 0.9$ AND $E_{29} > E_{28} \cdot 0.9$

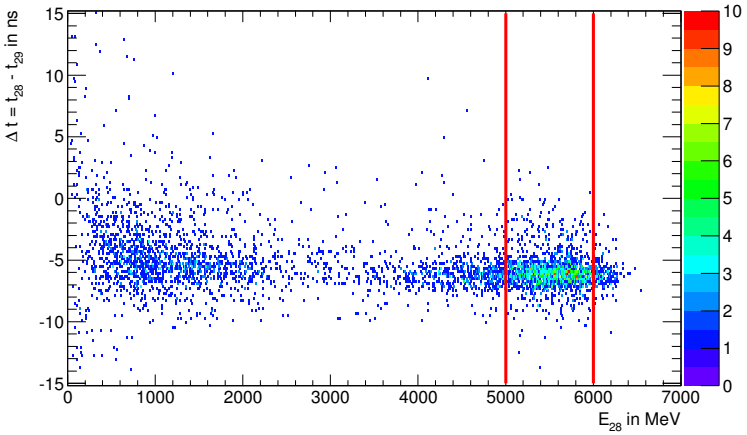

$\sigma(\Delta t) = (623.86 \pm 20.97)\,\mathrm{ps}$

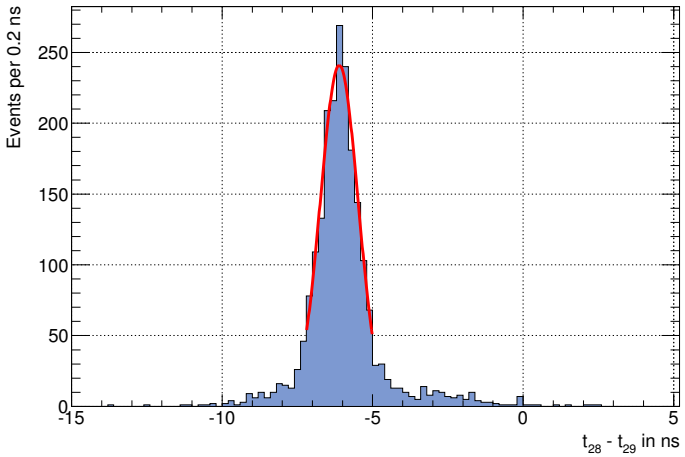

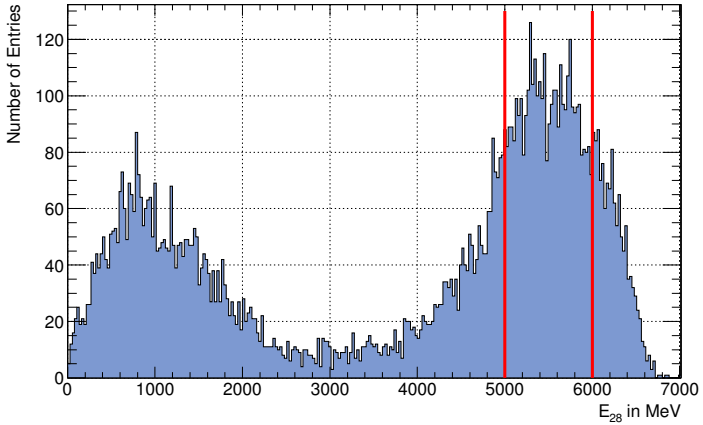

$$\sigma_{28/\mathrm{time}} = \sigma_{29/\mathrm{time}} = \frac{\sigma(\Delta t)}{\sqrt{2}}$$
$$= (441.14 \pm 14.83)\,\mathrm{ps}$$
$$@5.5\,\mathrm{GeV}$$

Higher Order Energy Correction - Motivation

- Significant energy loss in the passive material

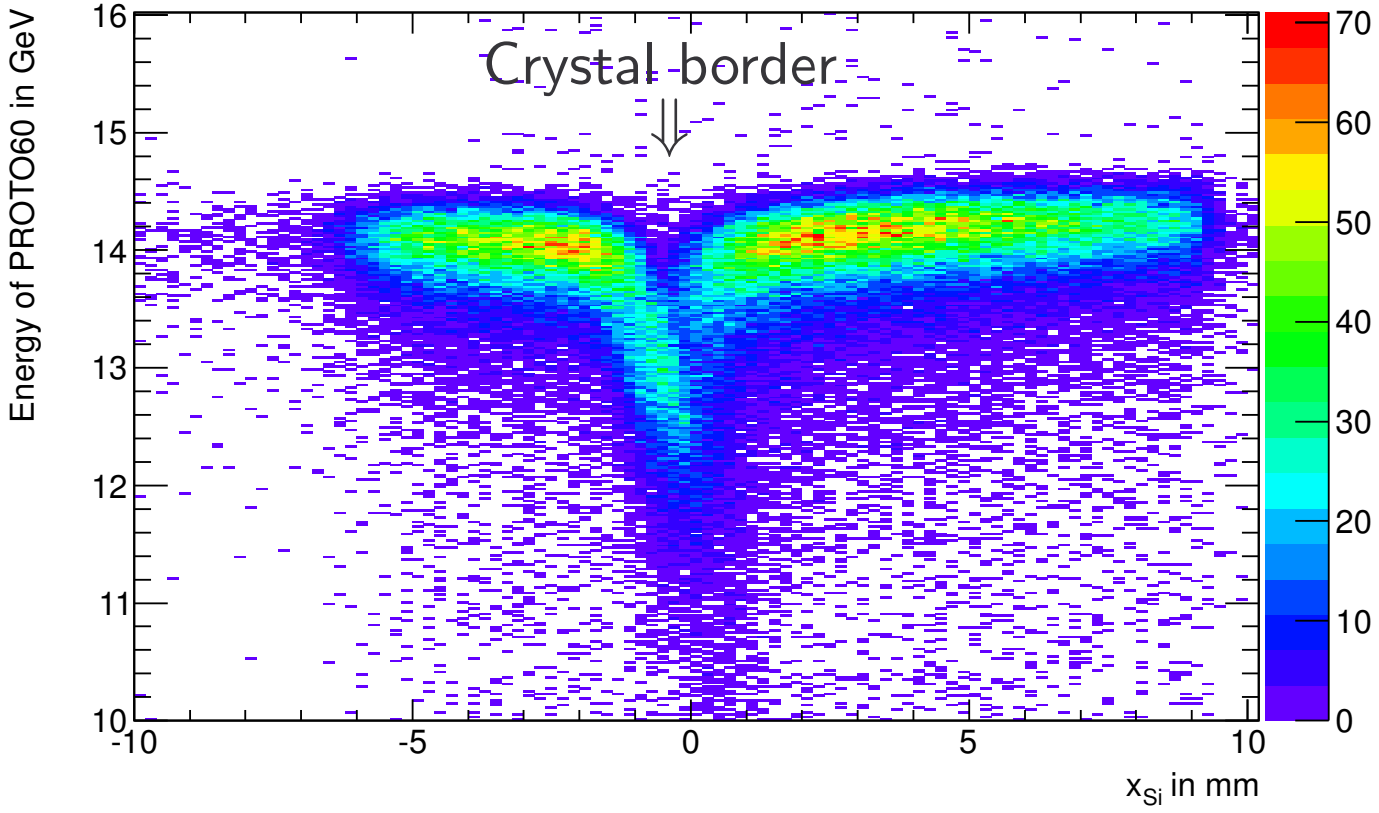

Higher Order Energy Correction - Motivation

- Significant energy loss in the passive material

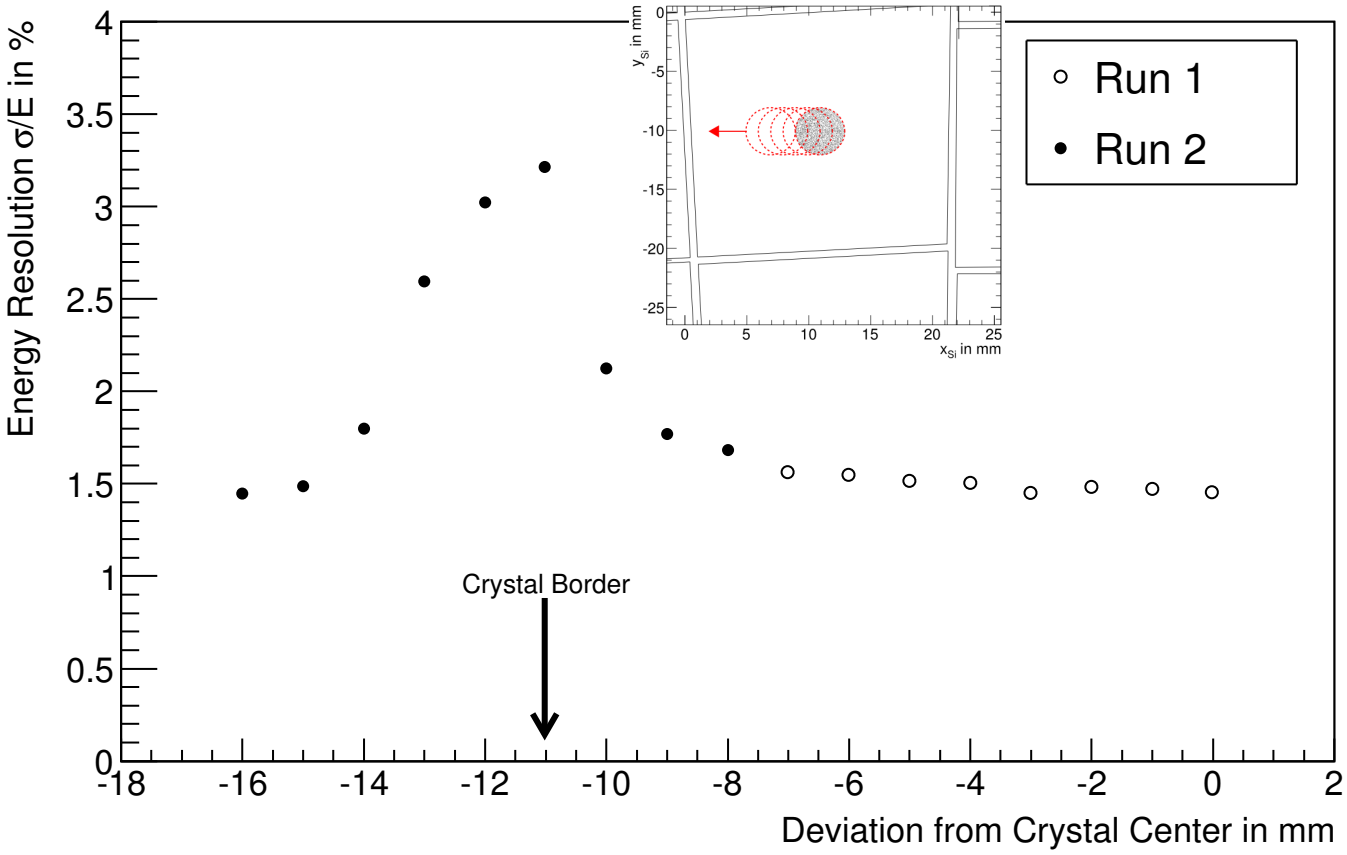

Higher Order Energy Correction - Schema

W_1 = Deposited Energy of right Neighbour

W_2 = Deposited Energy of left Neighbour

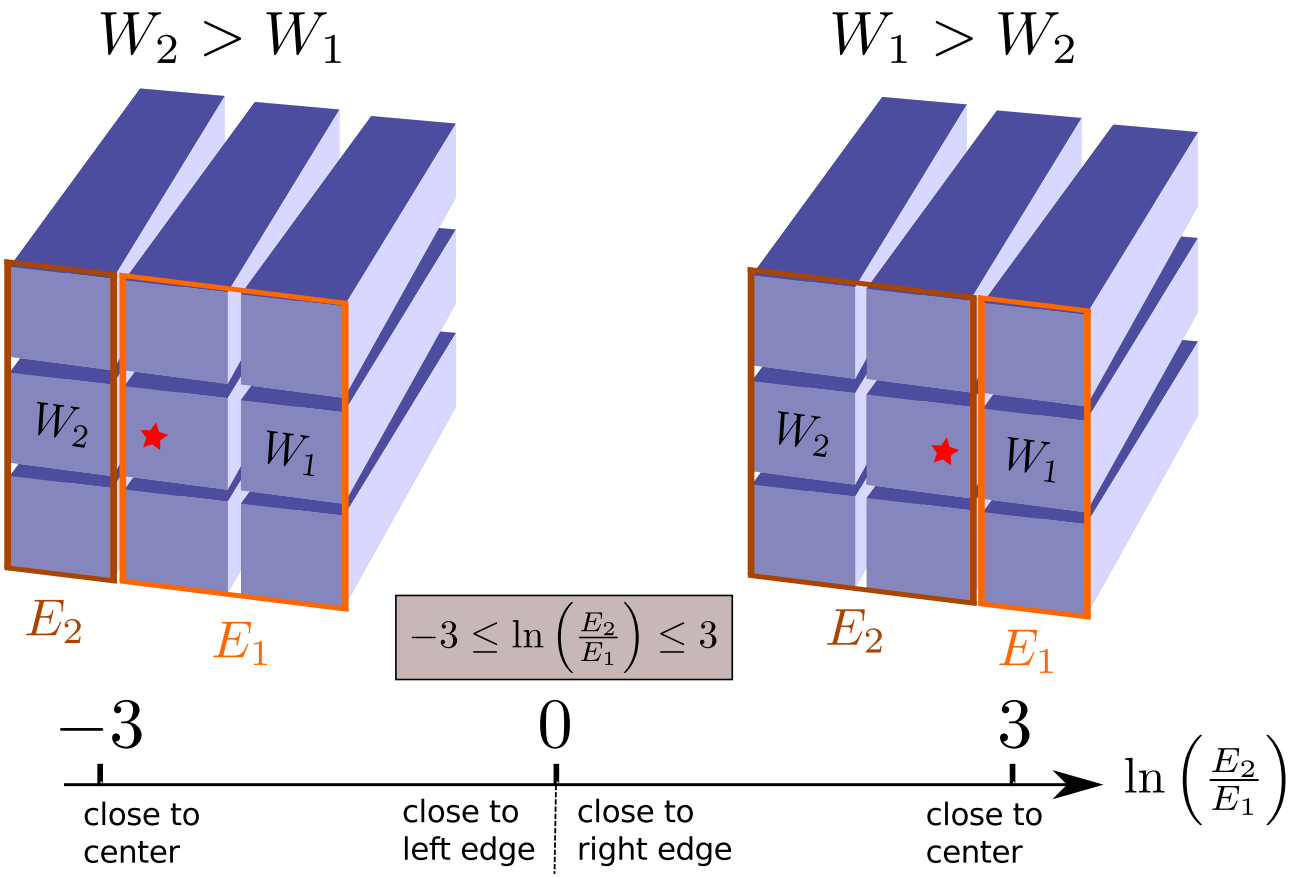

Higher Order Energy Correction - Schema

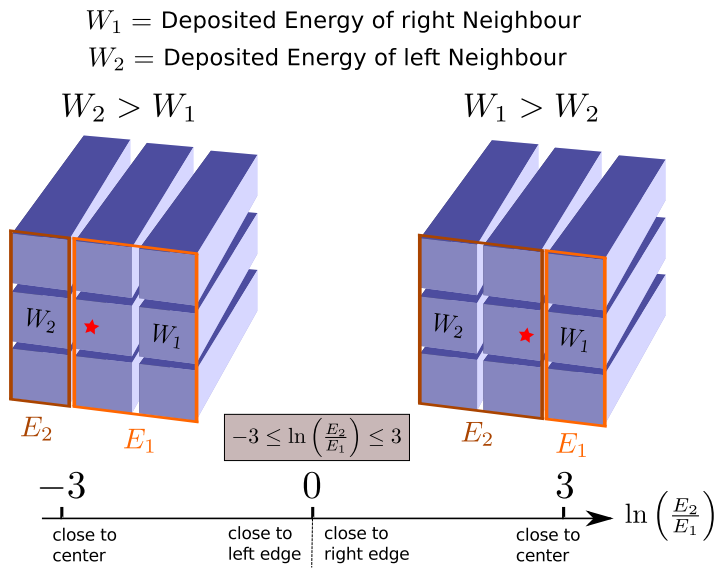

- subdivide $-3 \leq \ln\left(\frac{E_2}{E_1}\right) \leq 3$ into 50 parts

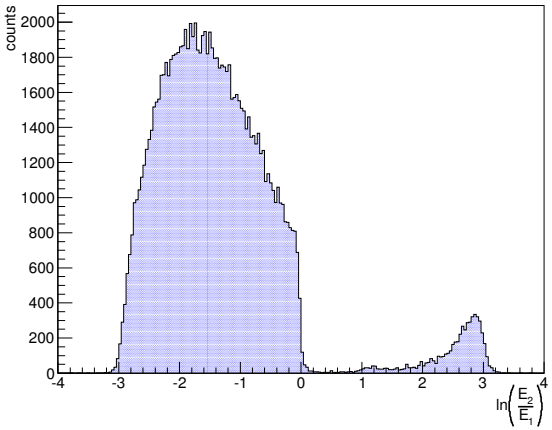

Higher Order Energy Correction - Schema

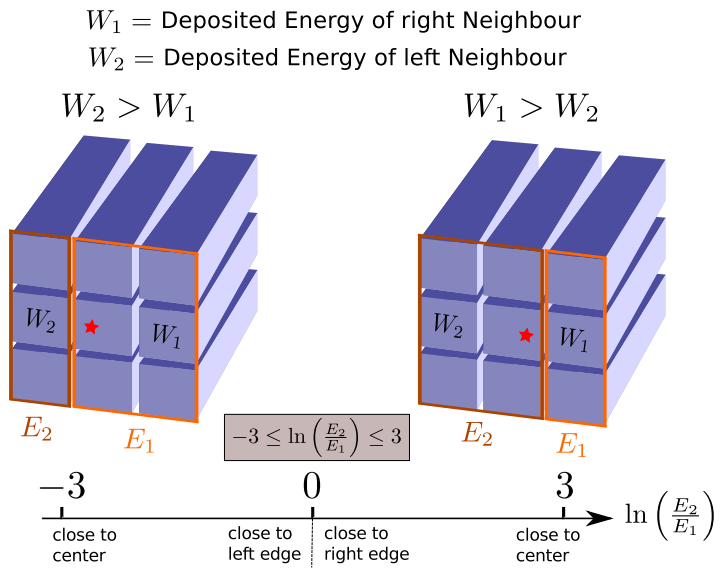

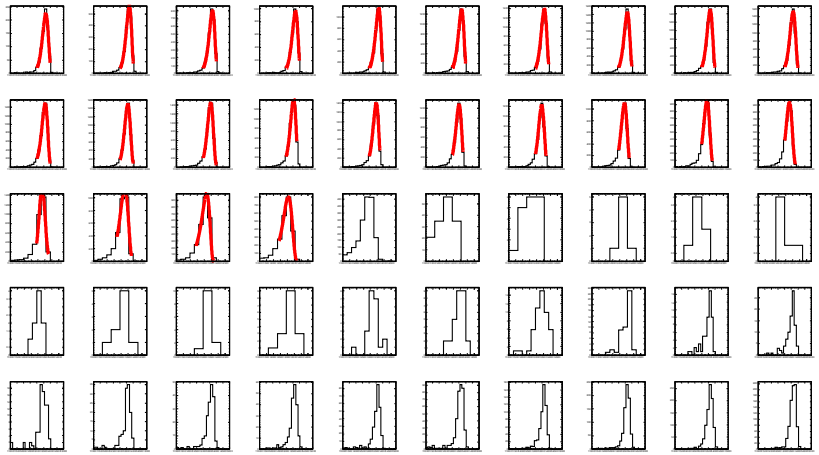

- subdivide $-3 \leq \ln\left(\frac{E_2}{E_1}\right) \leq 3$ into 50 parts
- determine corresponding energy peak position of each bin

Higher Order Energy Correction - Schema

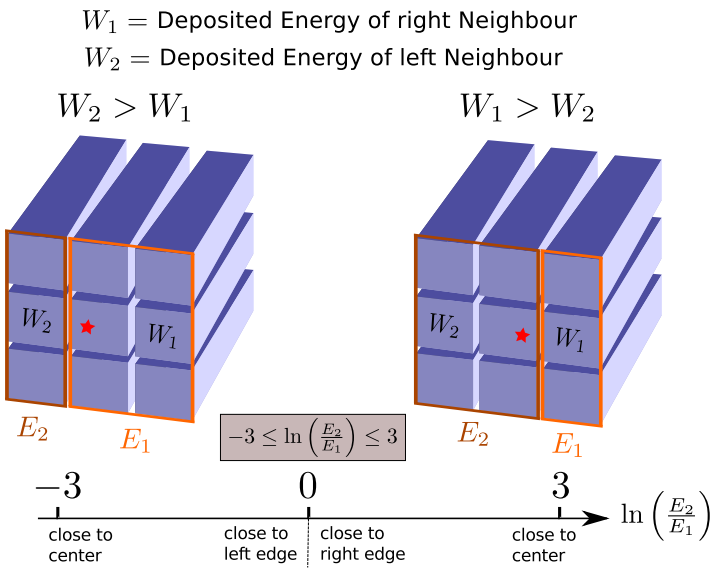

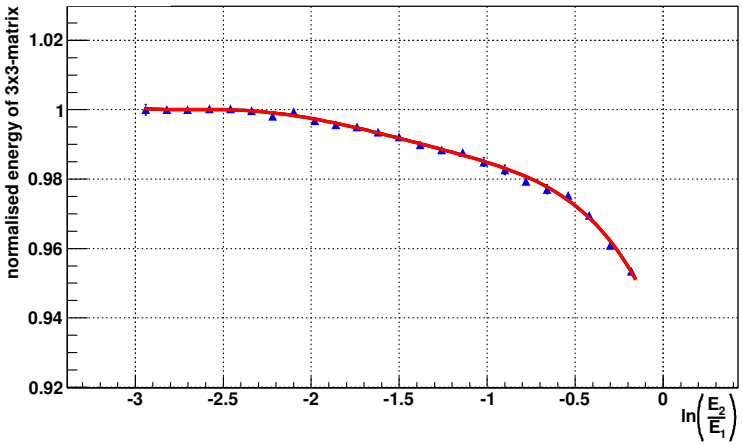

- subdivide $-3 \leq \ln\left(\frac{E_2}{E_1}\right) \leq 3$ into 50 parts
- determine corresponding energy peak position of each bin
- plot relative peak position as a function of $\ln\left(\frac{E_2}{E_1}\right)$
- fit with polynomial to get $f(x)$ with $x = \ln\left(\frac{E_2}{E_1}\right)$

$$\Rightarrow E_{3\times3/\text{new}} = \frac{E_{3\times3/\text{old}}}{f(x)}$$

Higher Order Energy Correction - Results

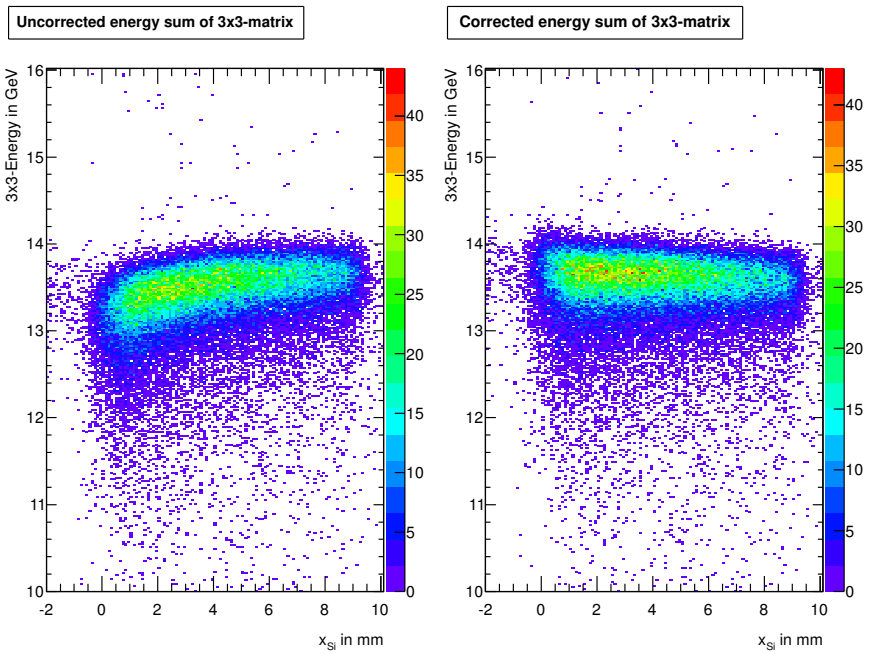

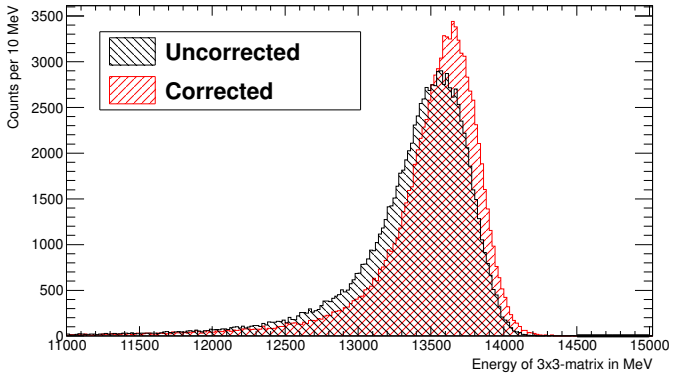

- PhD - Thesis of Tobias Eißner

"The new PWO Crystal Generation and Concepts for the Performance Optimisation of the PANDA EMC"

Higher Order Energy Correction - Results

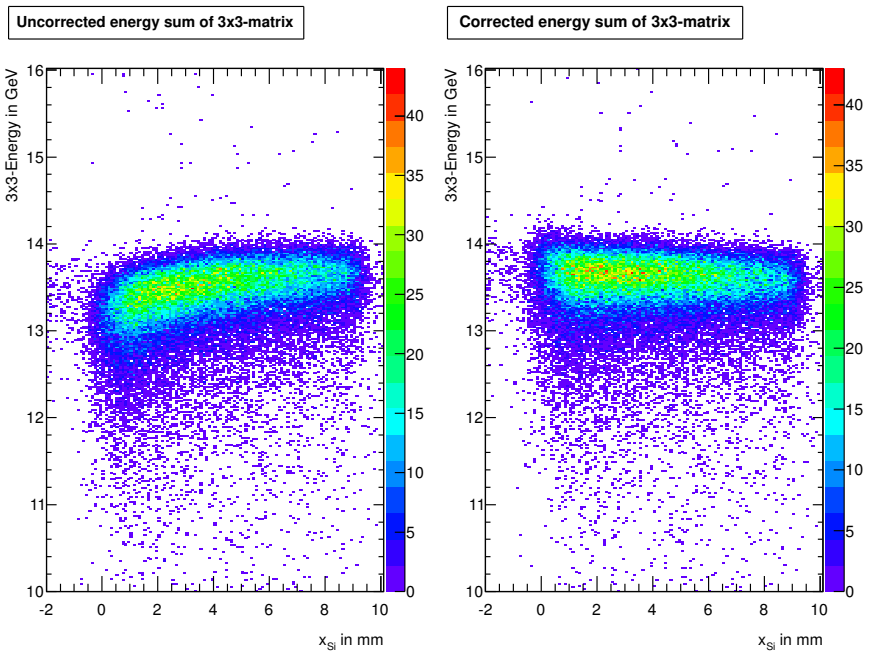

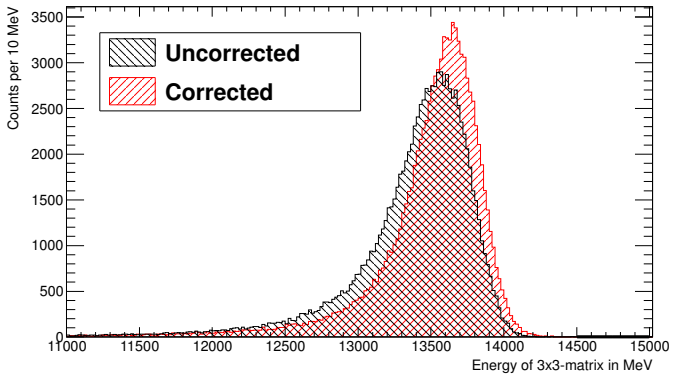

- PhD - Thesis of Tobias Eißner
  "The new PWO Crystal Generation and Concepts for the Performance Optimisation of the PANDA EMC"

Run	Parameter	Uncorrected	Corrected
1	Energy resolution $\frac{\sigma}{E_0}$ /%	1.625	1.585
2	Energy resolution $\frac{\sigma}{E_0}$ /%	1.896	1.688

PROTO120 - The next prototype

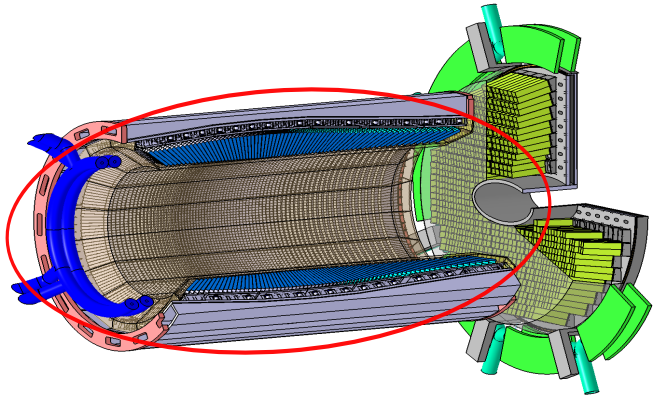

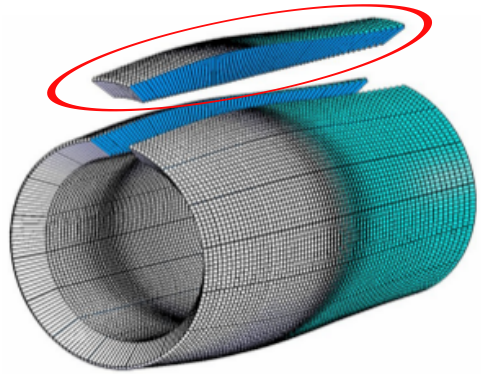

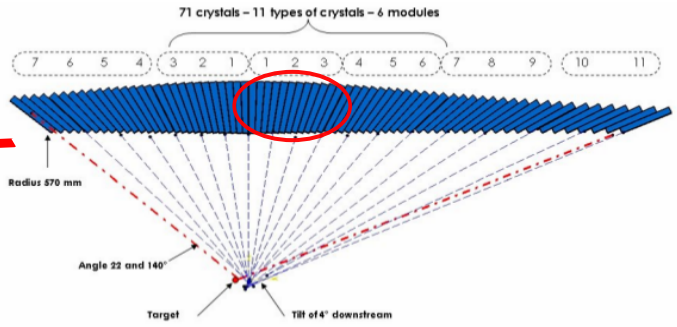

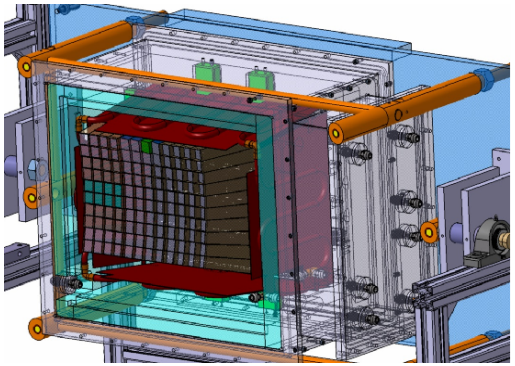

PROTO120 - Readout

- 2 LAAPDs per crystal
- Implementation of APFEL ASIC 1.4 with 2 different gains per channel (with adjustable relative factor of 16 – 32)

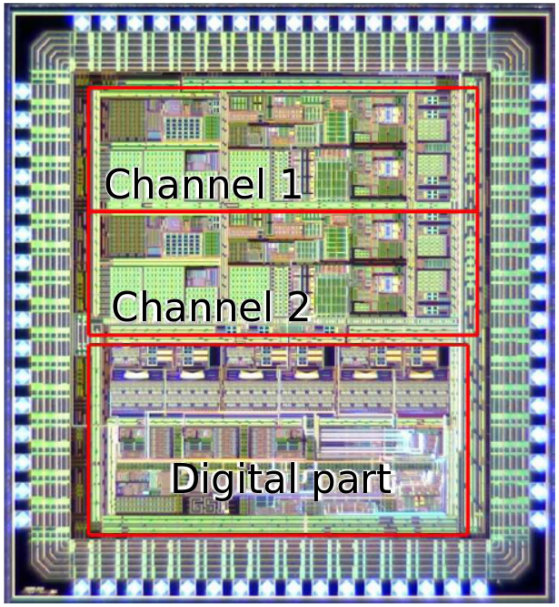

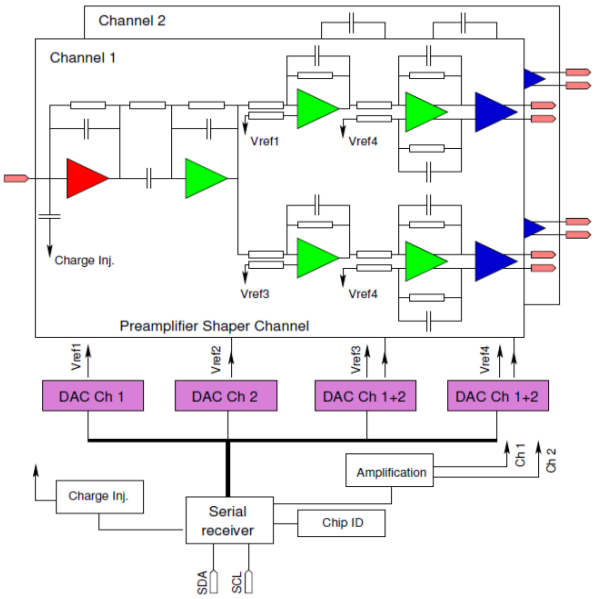

PROTO120 - Readout

- 2 LAAPDs per crystal
- Implementation of APFEL ASIC 1.4 with 2 different gains per channel (with adjustable relative factor of 16 – 32)

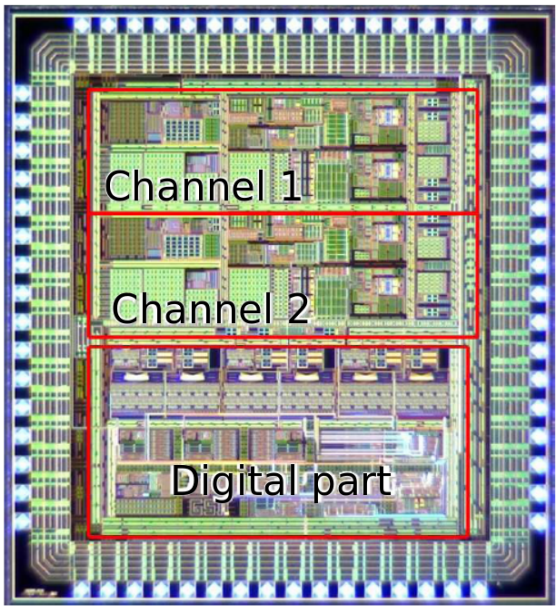

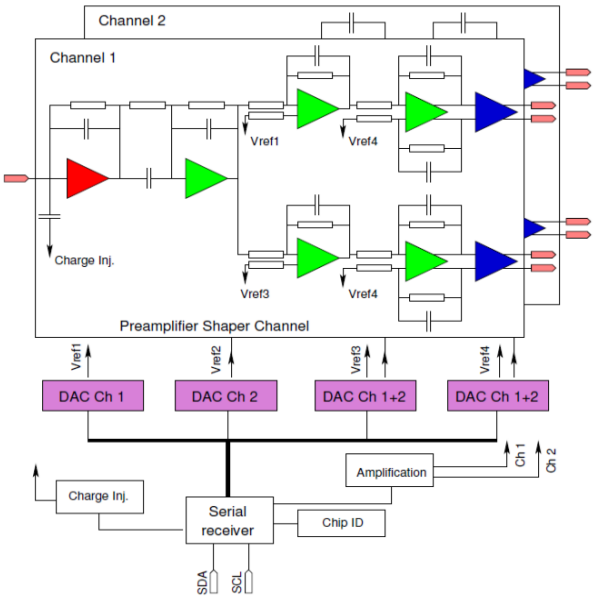

- Digitisation via SADCs

PROTO120 - Assembly

Start of assembly at Giessen in December

PROTO120 - First Tests

- Test setup inside climate chamber

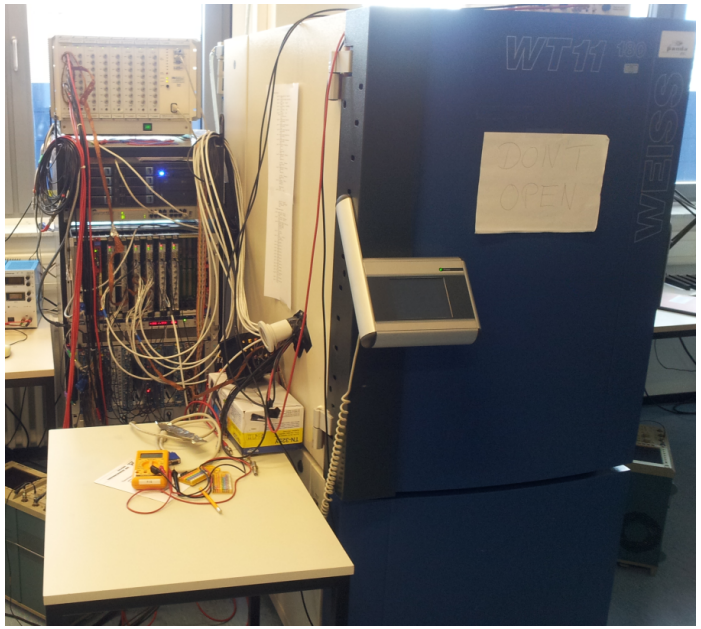

PROTO120 - First Tests

- Test setup inside climate chamber

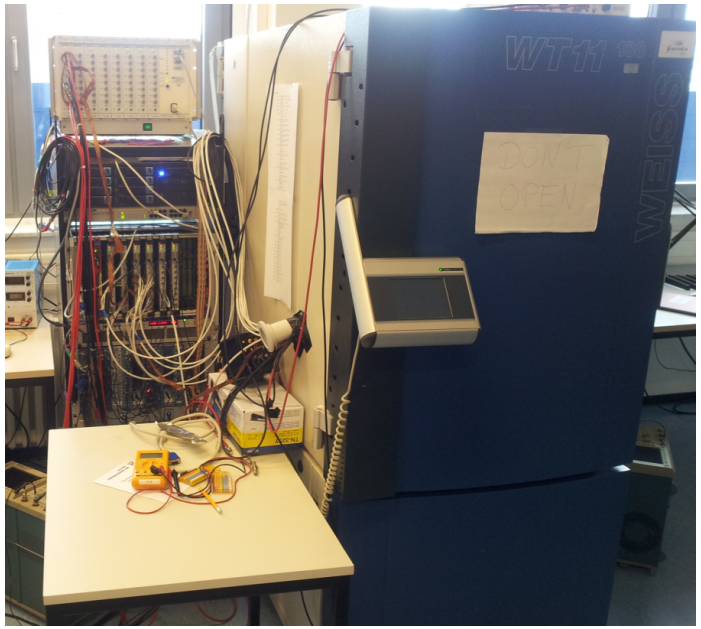

First cosmic event:

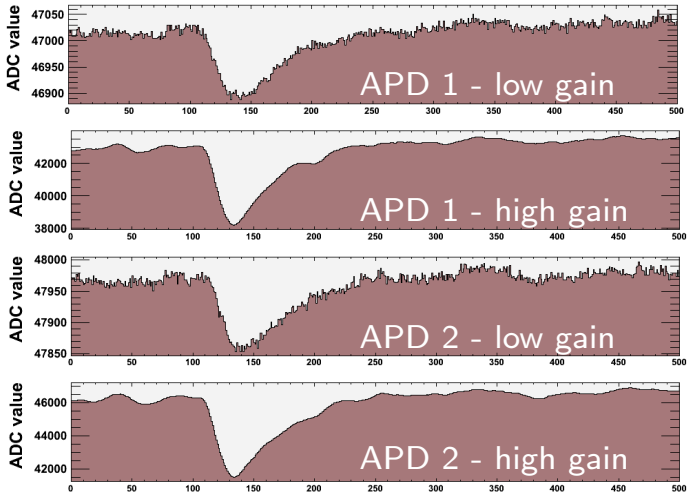

The new *XY*-Table

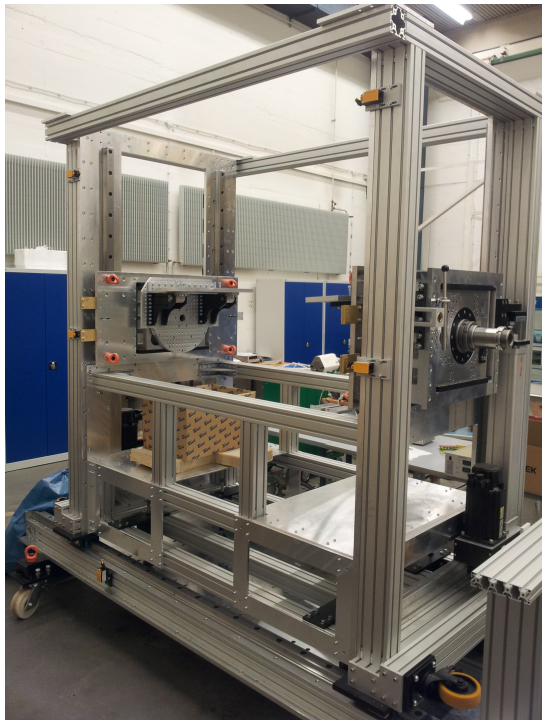

- spatial flexibility
- designed for current and future prototypes

Conclusion

- Energy resolution: Satisfying results

Conclusion

- Energy resolution: Satisfying results
- Best possible time resolution: $(441.1 \pm 14.8)\,\mathrm{ps}$

Conclusion

- Energy resolution: Satisfying results
- Best possible time resolution: $(441.1 \pm 14.8)\,\mathrm{ps}$
- Position resolution:

$$\sigma_{x/@CERN} \approx \sigma_{y/@CERN} \approx 1.1\,\mathrm{mm} < \sigma_{@\mathrm{Bonn/Mainz}} = \sigma_{\mathrm{Det}} \otimes \sigma_{\mathrm{Beam}}$$

Conclusion

- Energy resolution: Satisfying results
- Best possible time resolution: $(441.1 \pm 14.8)\,\mathrm{ps}$
- Position resolution:
  $\sigma_{x/@CERN} \approx \sigma_{y/@CERN} \approx 1.1\,\mathrm{mm} < \sigma_{@\mathrm{Bonn/Mainz}} = \sigma_{\mathrm{Det}} \otimes \sigma_{\mathrm{Beam}}$

$\Rightarrow$ Test program of PROTO60 accomplished

Conclusion

- Energy resolution: Satisfying results
- Best possible time resolution: $(441.1 \pm 14.8)\,\mathrm{ps}$
- Position resolution:
  $\sigma_{x/@CERN} \approx \sigma_{y/@CERN} \approx 1.1\,\mathrm{mm} < \sigma_{@\mathrm{Bonn/Mainz}} = \sigma_{\mathrm{Det}} \otimes \sigma_{\mathrm{Beam}}$

$\Rightarrow$ Test program of PROTO60 accomplished

- One third of the PROTO120 is assembled
- First tests regarding electronics are in progress

Thank you for listening!