II. Physikalisches Institut

JUSTUS-LIEBIG-UNIVERSITÄT GIESSEN

IONAS

GSI

HELMHOLTZ GEMEINSCHAFT

# Cryogenic Stopping Cell for the Super-FRS - Simulations, Technical Realization and First Results

**Pascal Reiter**
II. Physikalisches Institut, JLU Gießen, Germany

- Motivation
- Cryogenic Stopping Cell (CSC)
- FRS Ion Catcher
  - Layout
  - Results
- Summary and Outlook

# NUSTAR@FAIR

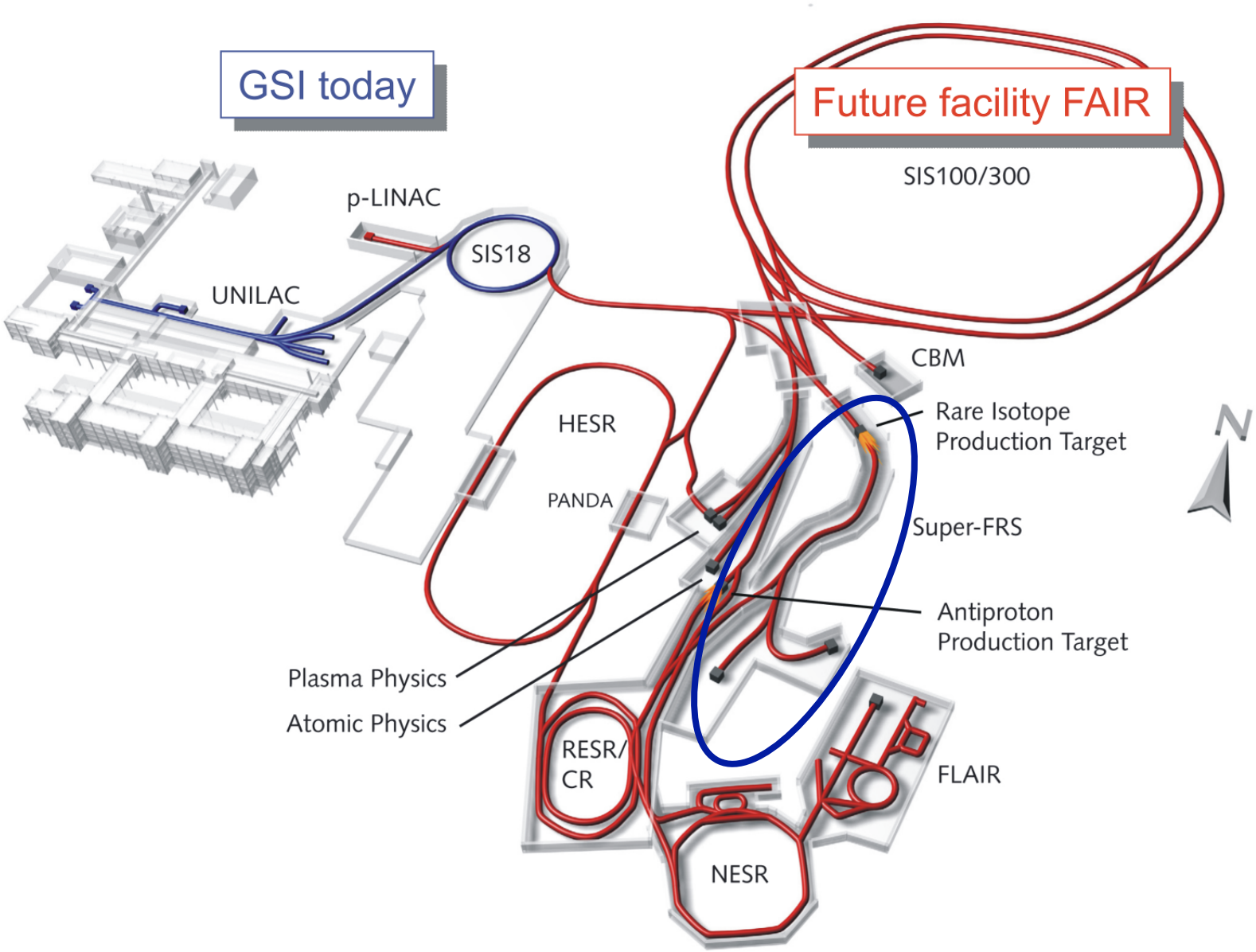
GSI today
Future facility FAIR
SIS100/300
p-LINAC
SIS18
UNILAC
CBM
HESR
Rare Isotope
Production Target
PANDA
Super-FRS
Antiproton
Production Target
Plasma Physics
Atomic Physics
RESR/
CR
FLAIR
NESR
N

# Super-FRS: Central Instrument of NUSTAR

Low-energy branch (LEB)

- HISPEC/DESPEC:
  High-Resolution in-Beam and Decay Spectroscopy
- MATS: Mass Measurements and
  Advanced Trapping Techniques
- LaSpec: Laser Spectroscopy

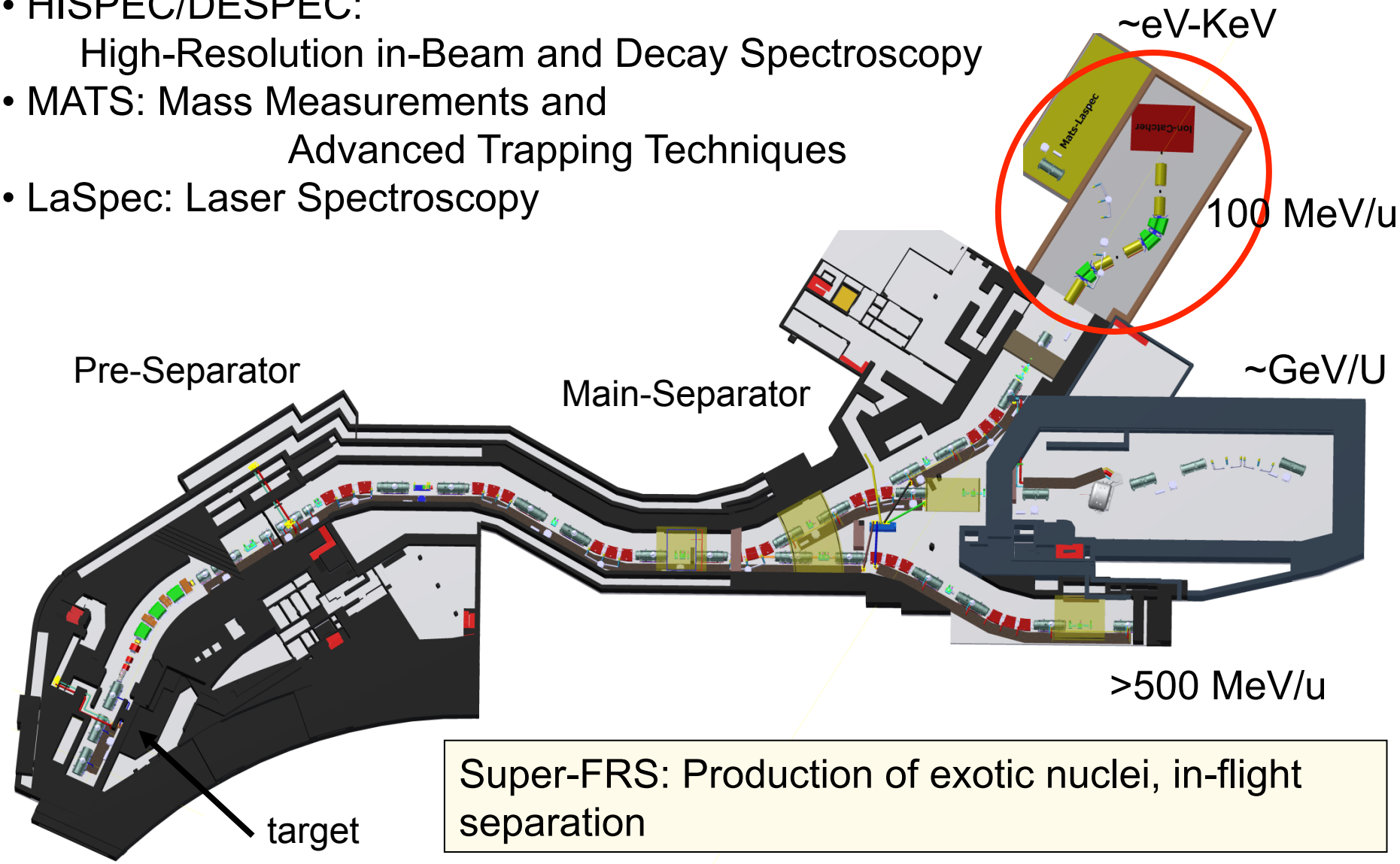


Super-FRS: Production of exotic nuclei, in-flight separation

# LEB Rare Ion Beams (ISOL-Typ experiments)

D. Rodriguez et al., Eur. Phys. J. Special Topics 183 (2010) 1

## MATS (Precision Measurements of very short-lived nuclei using an Advanced Trapping System for highly charged ions)

- High precision mass measurements
- Spectroscopy on highly-charged ions
- In trap spectroscopy

→

- Nuclear structure
- Test of mass models far from stability
- Nuclear astrophysics
  - Explain nuclear abundances
  - Nucleosynthesis
    - e.g. r-process

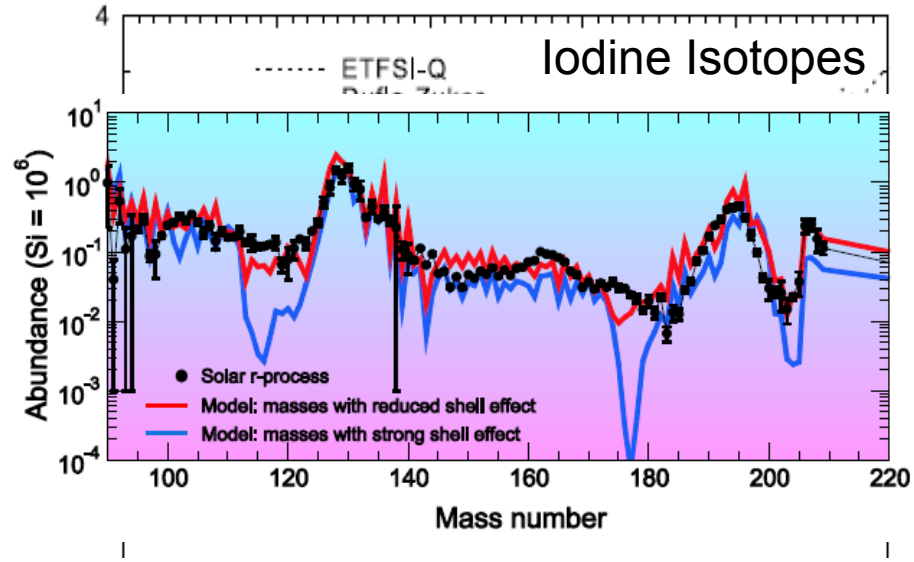


## LaSpec (LAser SPECtroscopy)

- Collinear laser spectroscopy on ions
- Optical pumping and collinear laser spectroscopy on atoms

→

Isotope shift, hyperfine structure, Charge radii and nuclear moments

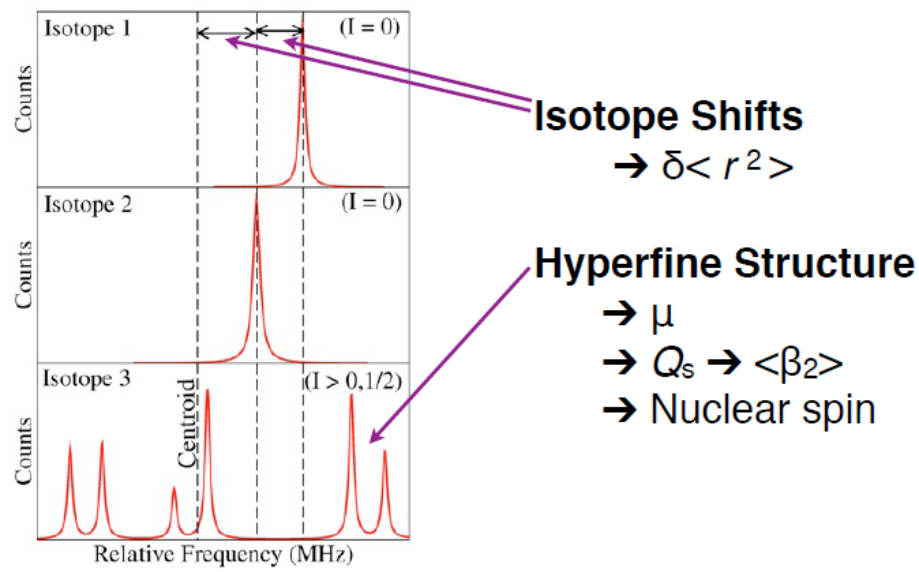

# LEB: Challenges

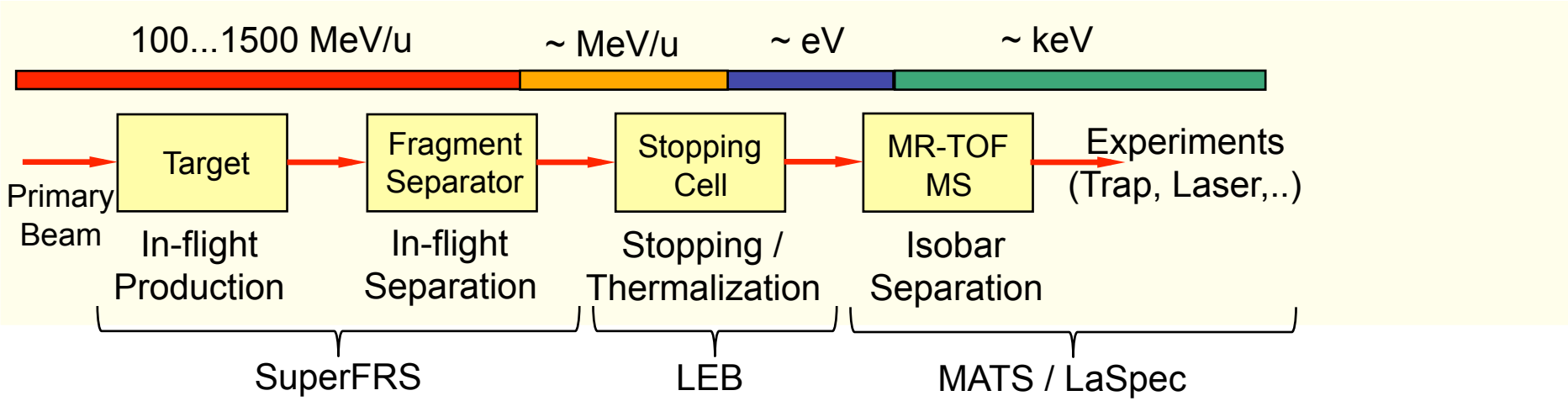


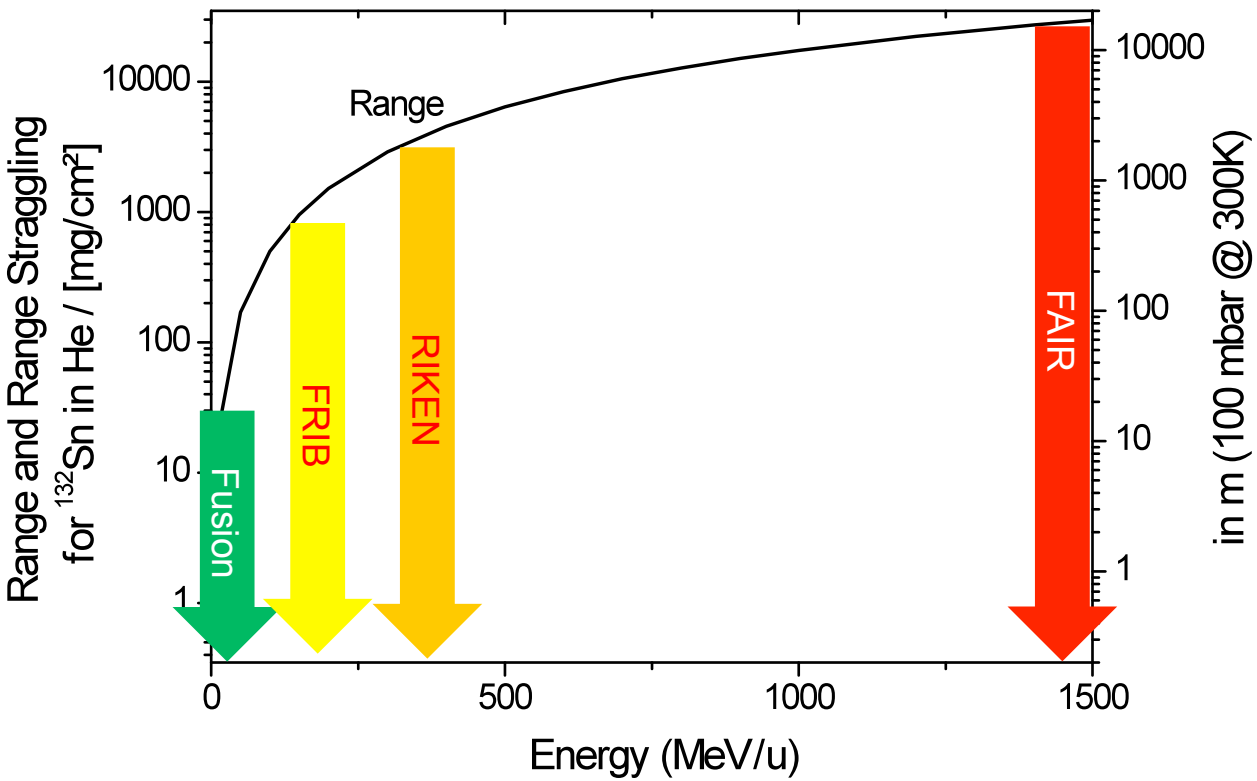

# LEB: Challenges

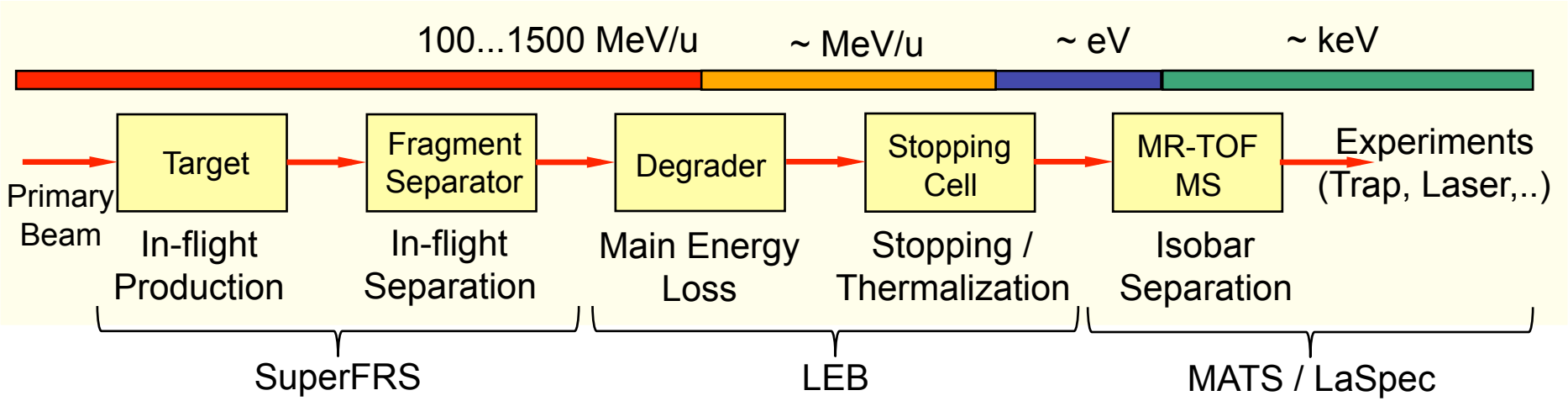


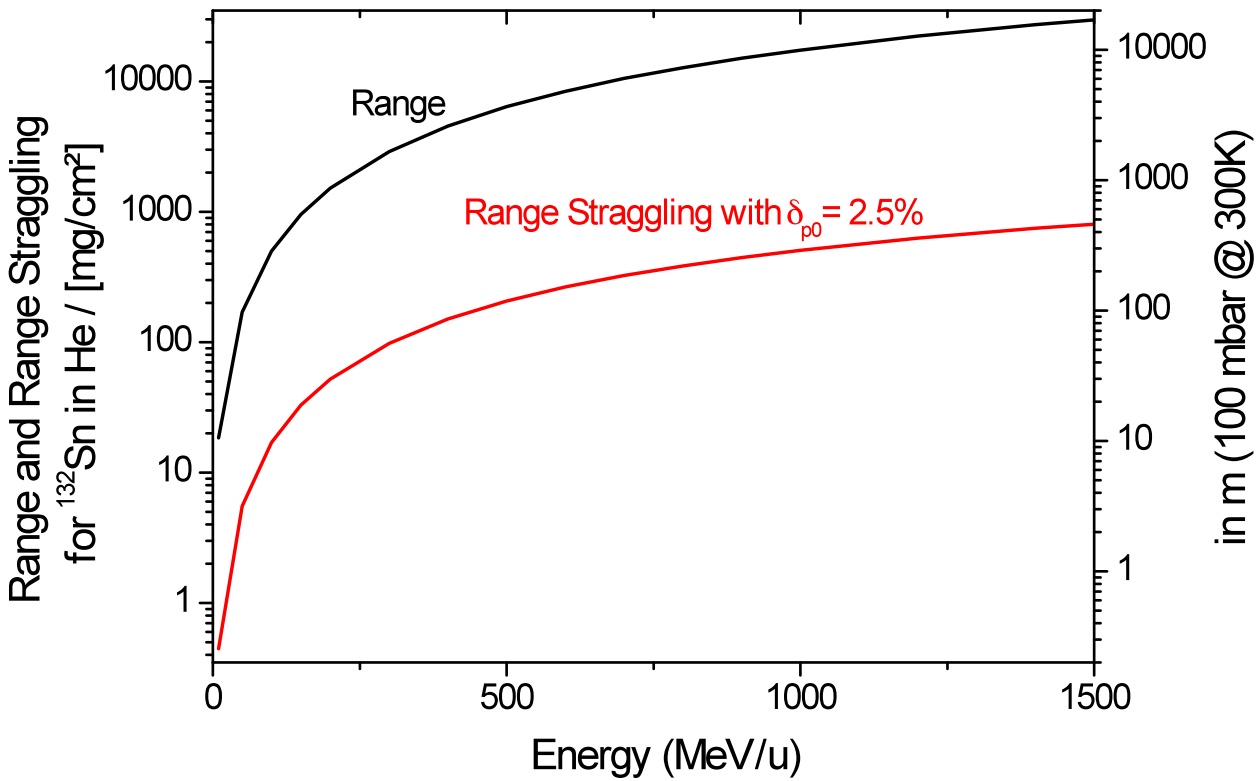

# LEB: Momentum Compression

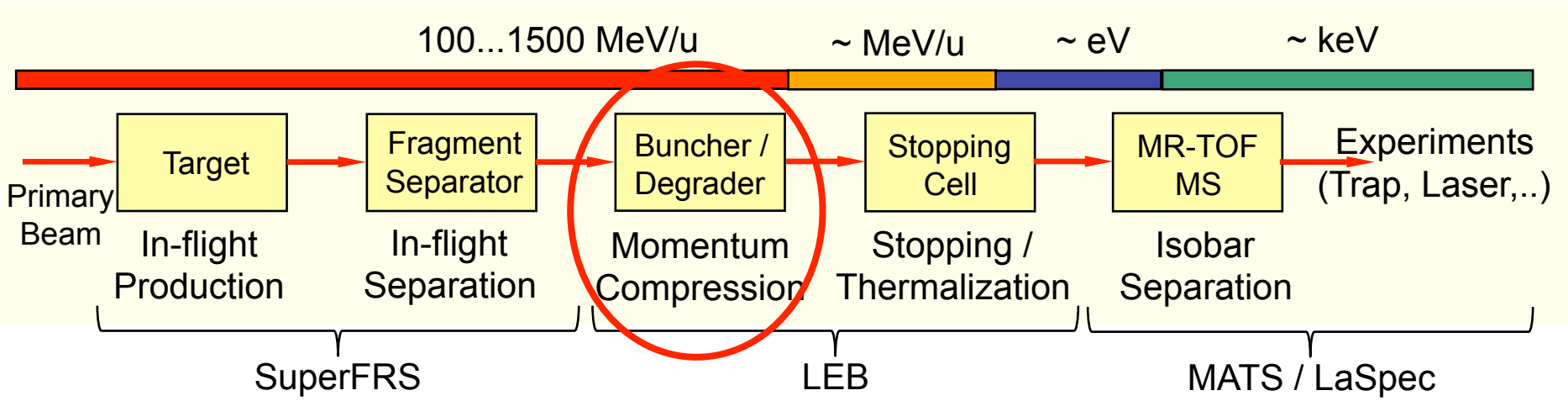


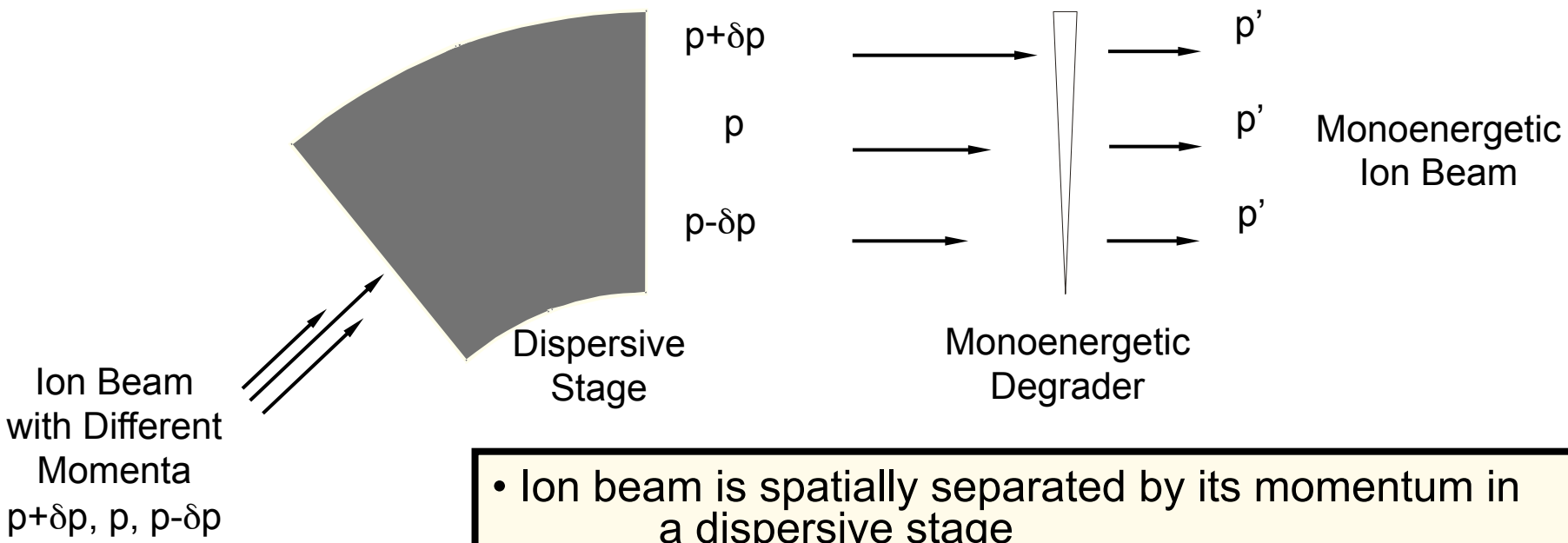


- Ion beam is spatially separated by its momentum in a dispersive stage
- Monoenergetic degrader reduces momentum spread
- Allows stopping in realistic amount of material

H. Weick et al., NIM B 164 (2000) 168

# LEB: Challagnes

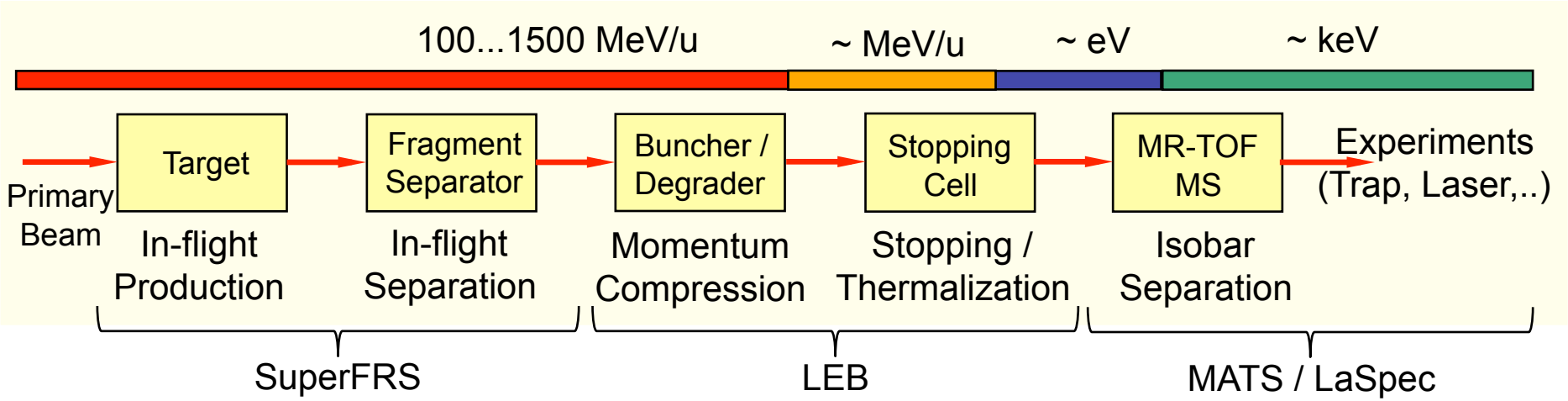


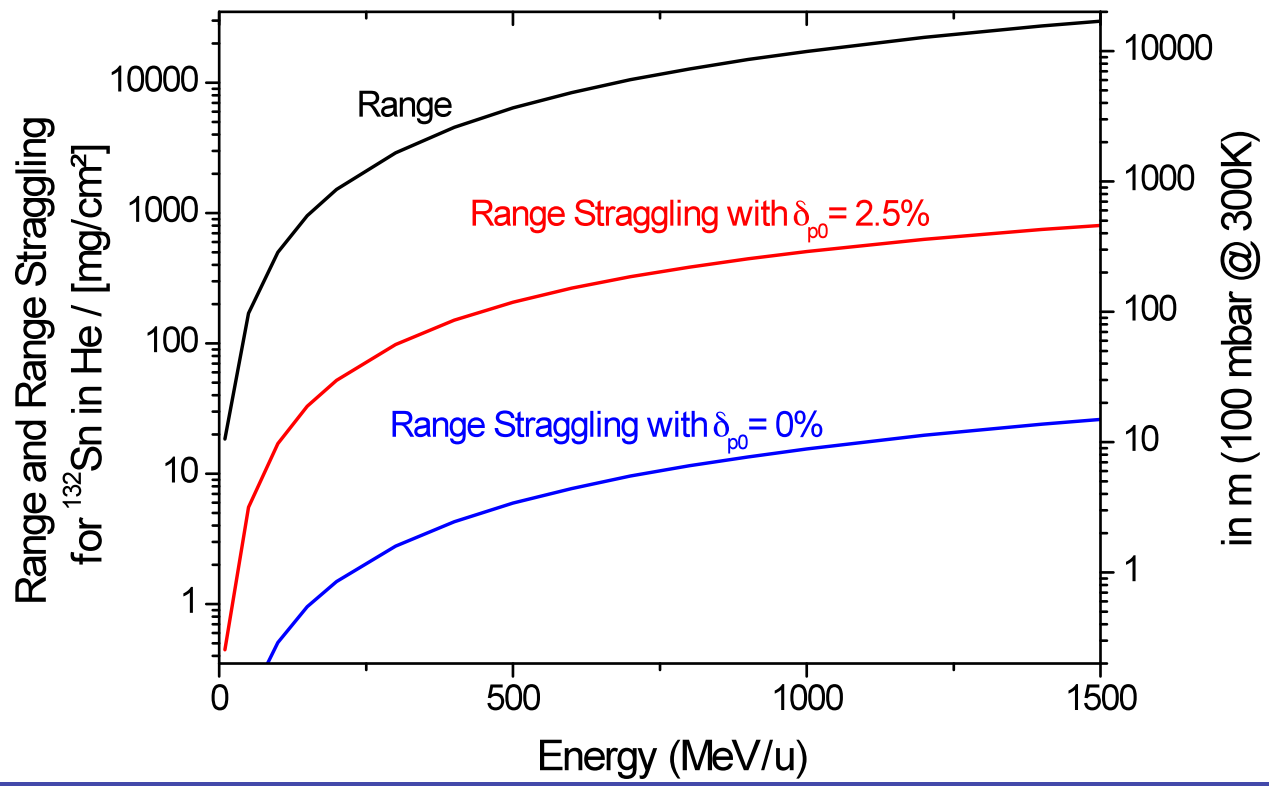

# LEB: Stopping and Thermalization

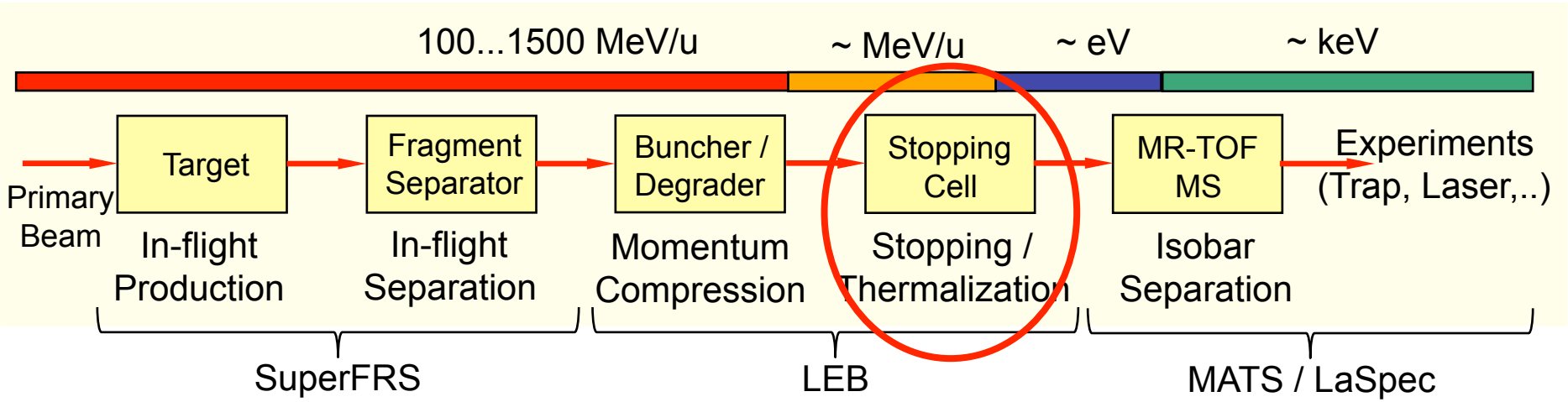


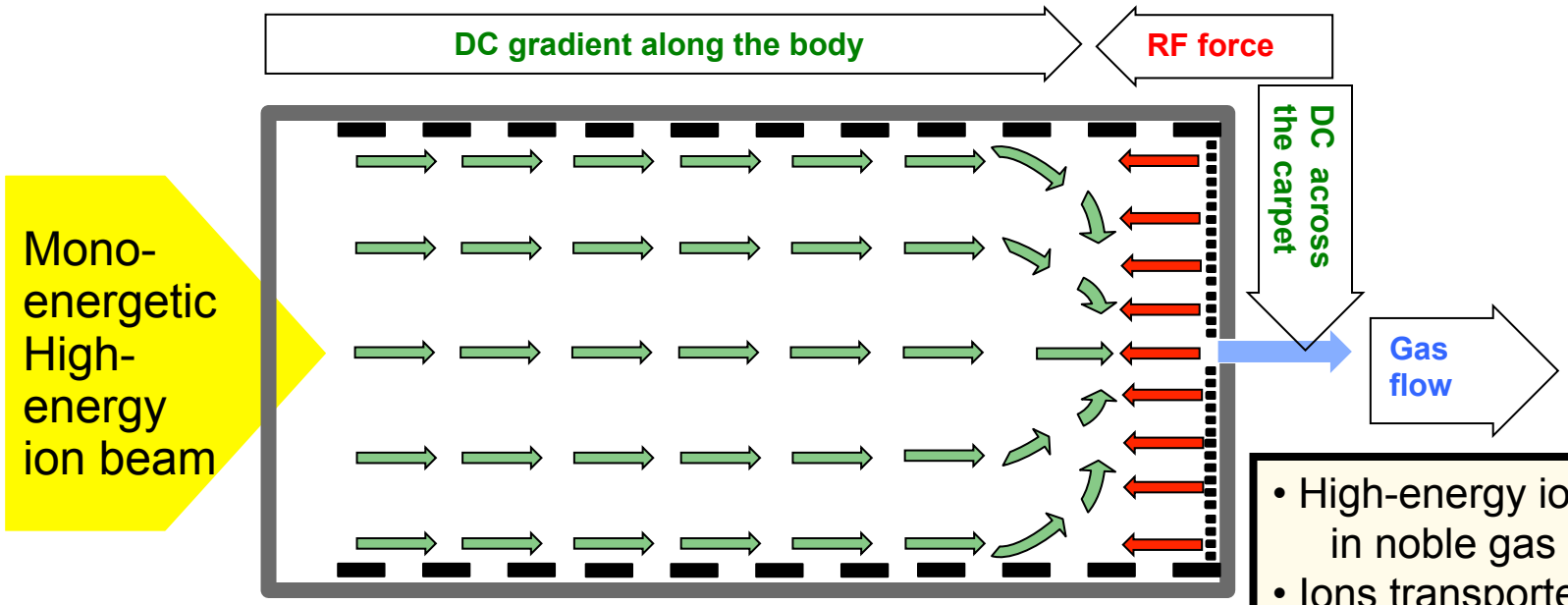


*Arrows show direction of force*

- High-energy ions stopped in noble gas
- Ions transported using DC and RF fields to exit-hole
- Extraction by gas flow

# Cryogenic Stopping Cell of the FRS Ion Catcher

## A prototype for the LEB

# Novel Concept I: **Cryogenic** Stopping Cell

Operate at cryogenic temperature (<100 K)

- Gas cell acts as cryogenic pump

- Ultra-pure helium (freezing-out of contaminants)
  - Ideal for ion survival,
  - 2+ charge state possible
  - No formation of molecules/adducts
- Improves differential pumping
- Reduced requirements for cleanliness
  → easier, more flexible construction

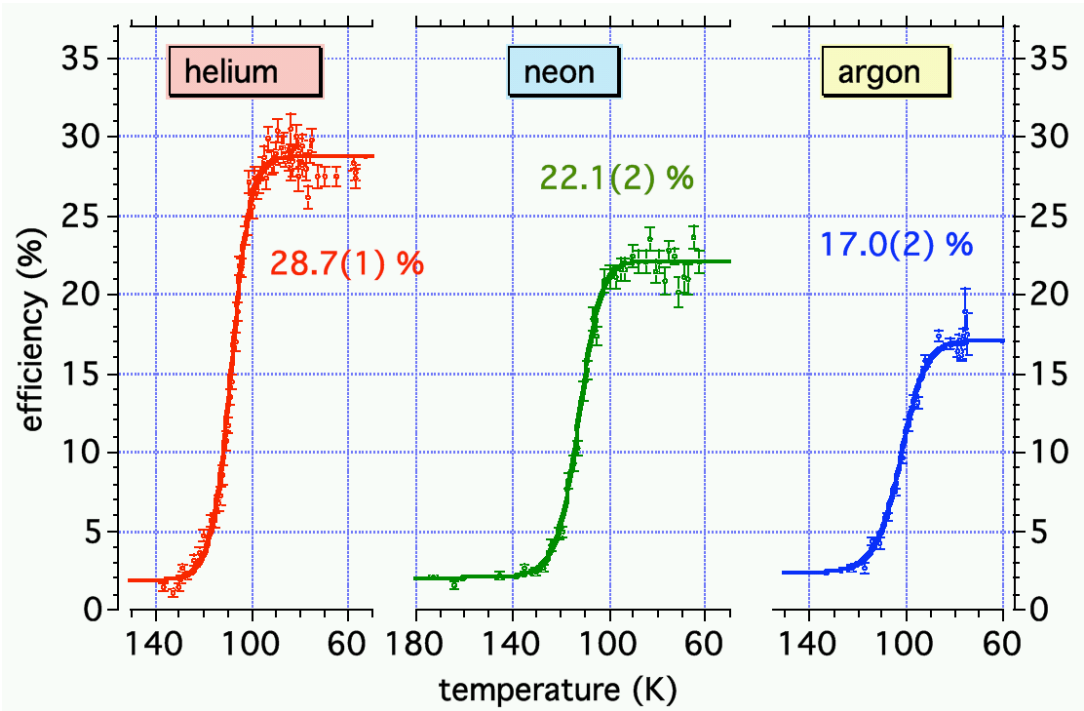


P. Dendooven et al., NIM A 558 (2006) 580
S. Purushothaman et al., NIM B 266 (2008) 4488

# Novel Concept II: **High Density** Stopping Cell

Large axial DC field → fast extraction

$$v_z = K \times E_z^{\mathrm{DC}}$$

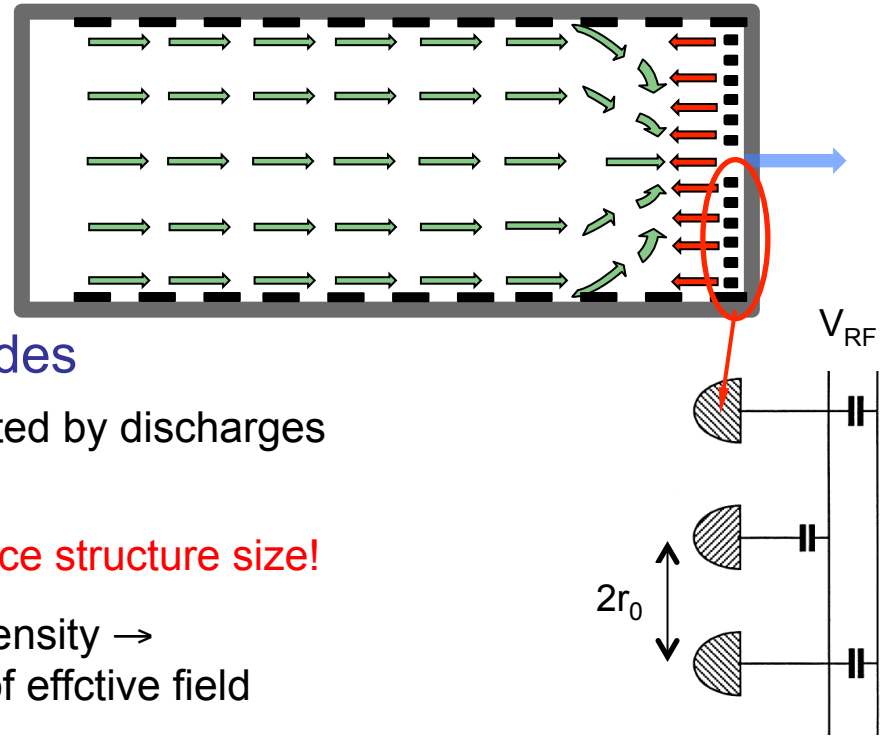


Effective RF field repels ions from electrodes

$$E_{eff} \propto K^2 \frac{m}{q} \frac{V_{\mathrm{RF}}^2}{r_0^3} \propto \frac{qm}{n^2} \frac{V_{\mathrm{RF}}^2}{r_0^3}$$

limited by discharges

reduce structure size!

high gas density →
reduction of effctive field

Use RF structure with small spacing (PCB-based RF-carpet) to achieve high RF repelling field

(4 electrodes/mm compared to 1 electrode/mm)

- High stopping gas densities
- Less complex construction than RF funnels

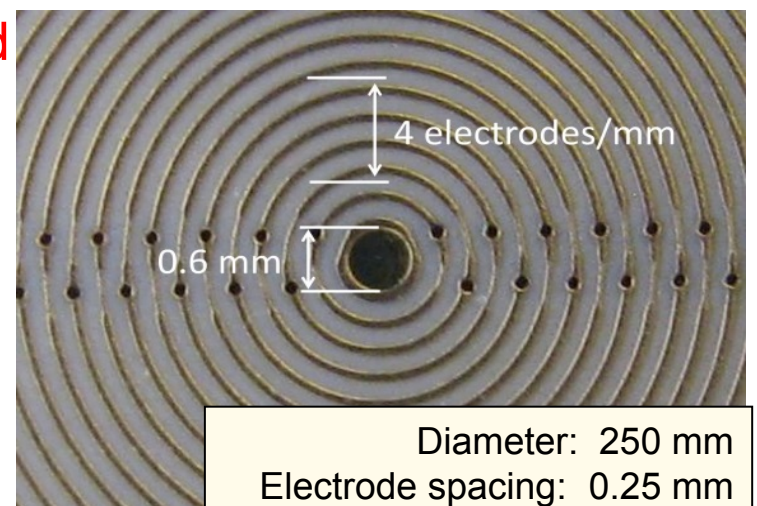


Diameter: 250 mm
Electrode spacing: 0.25 mm


A. Tolmachev, Int. J. Mass Spectrom. 203 (2000) 31
M. Wada et al., NIM B 204 (2003) 570

# Cryogenic Stopping Cell Design

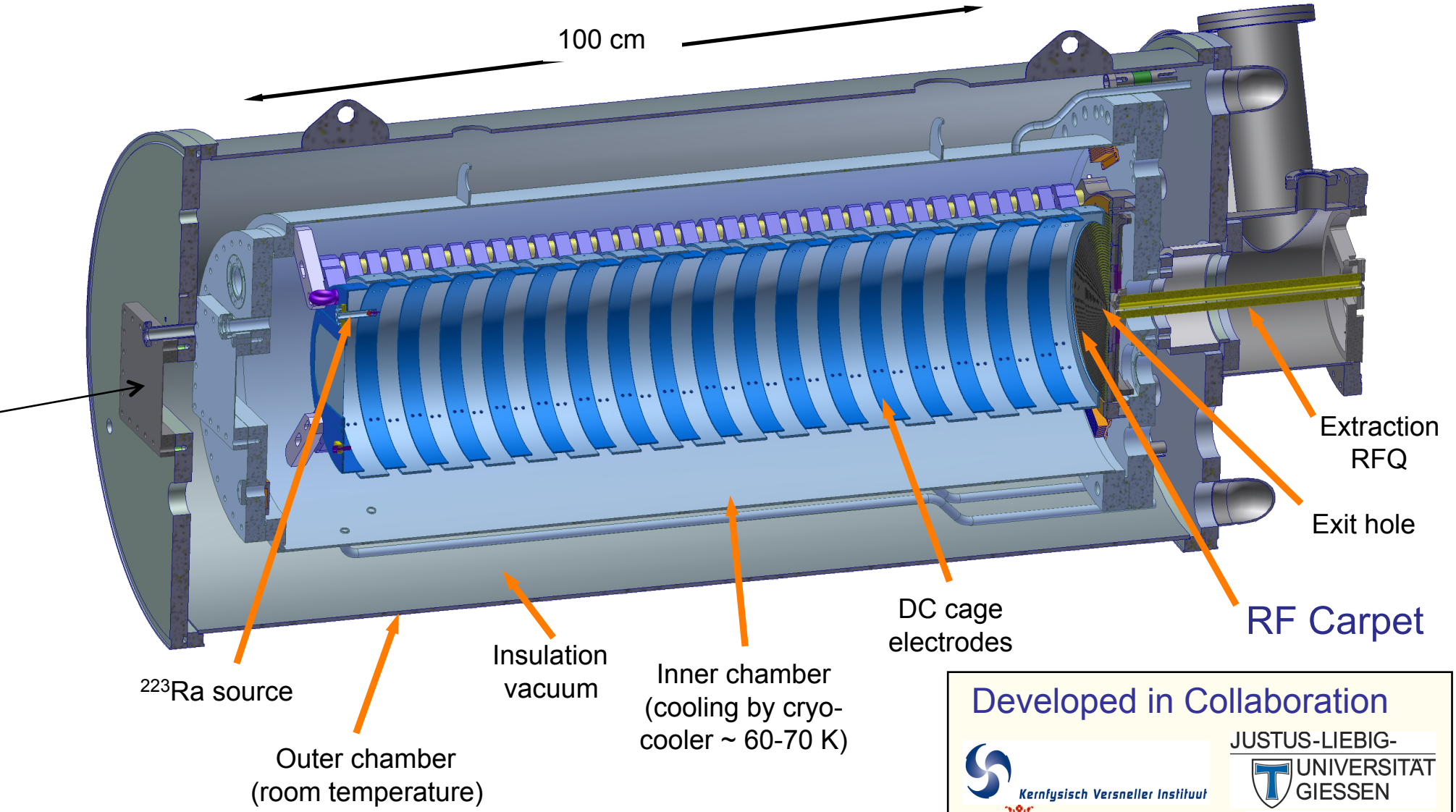


M. Ranjan et al., Europhys. Lett. 96 (2011) 52001
M. P. Reiter, Master Thesis, Justus-Liebig-Universität Gießen (2011)

**Developed in Collaboration**

Kernfysisch Versneller Instituut
university of groningen
JUSTUS-LIEBIG-UNIVERSITÄT GIESSEN
GSI

# Cryogenic Stopping Cell Simulations

## Simulation of the RF Carpet

- Support design of the CSC
- Improve understanding of processes at the RF carpet
- Simulations and experiments fit
- Demonstrate capabilities of the RF carpet for the LEB stopping cell

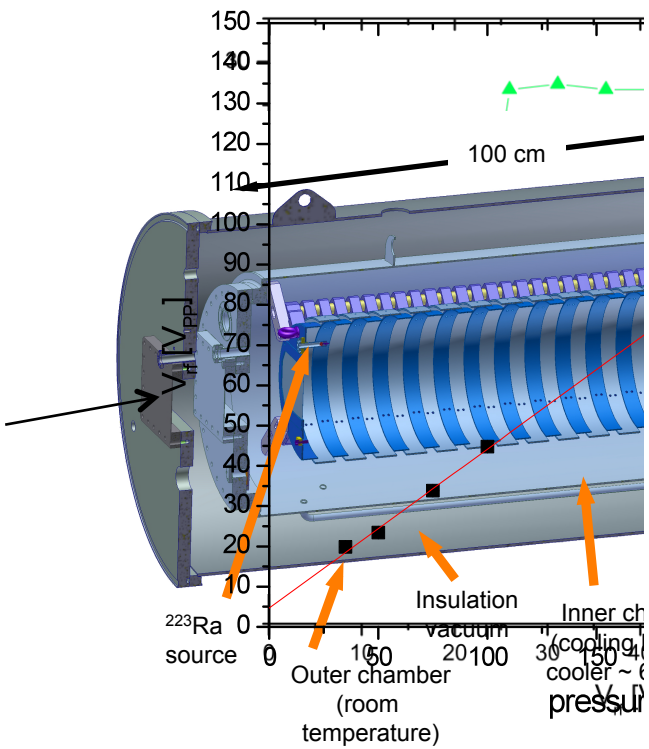


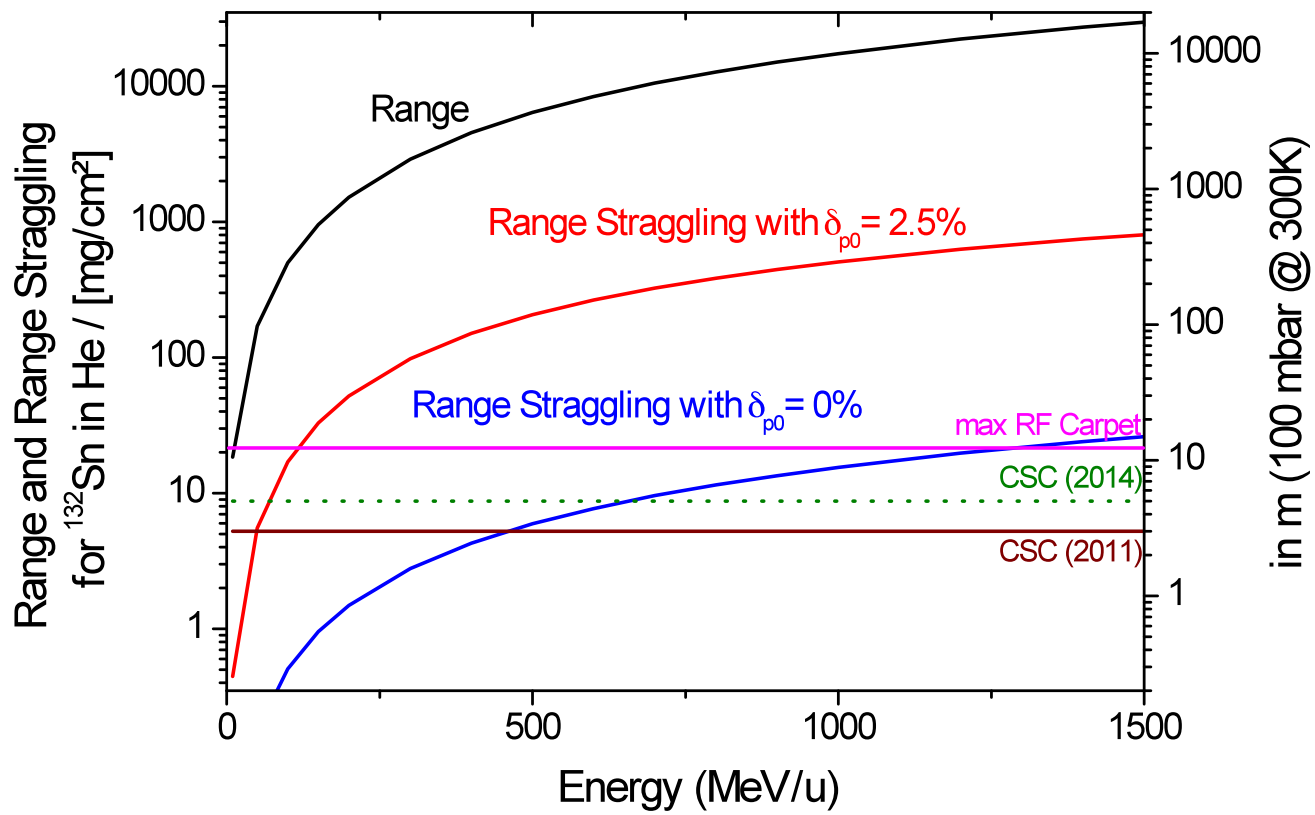

# MR-TOF-MS

- Broadband mass spectrometer for diagnosis of the CIC and adjustment the range bunching
- High precision mass measurements of short-lived nuclei
- Isobar separation with high ion capacity (for e.g. mass-selected decay spectroscopy)

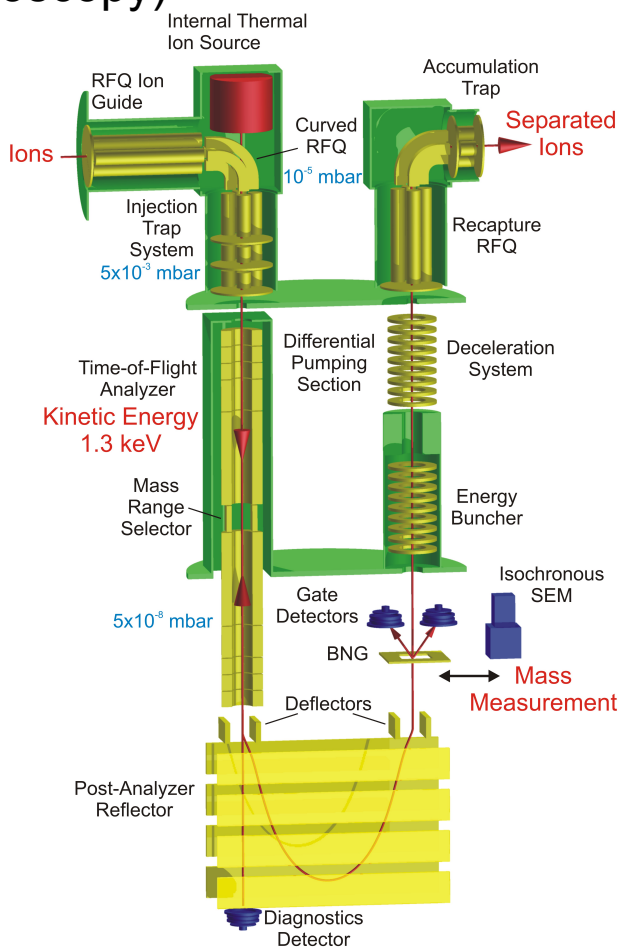


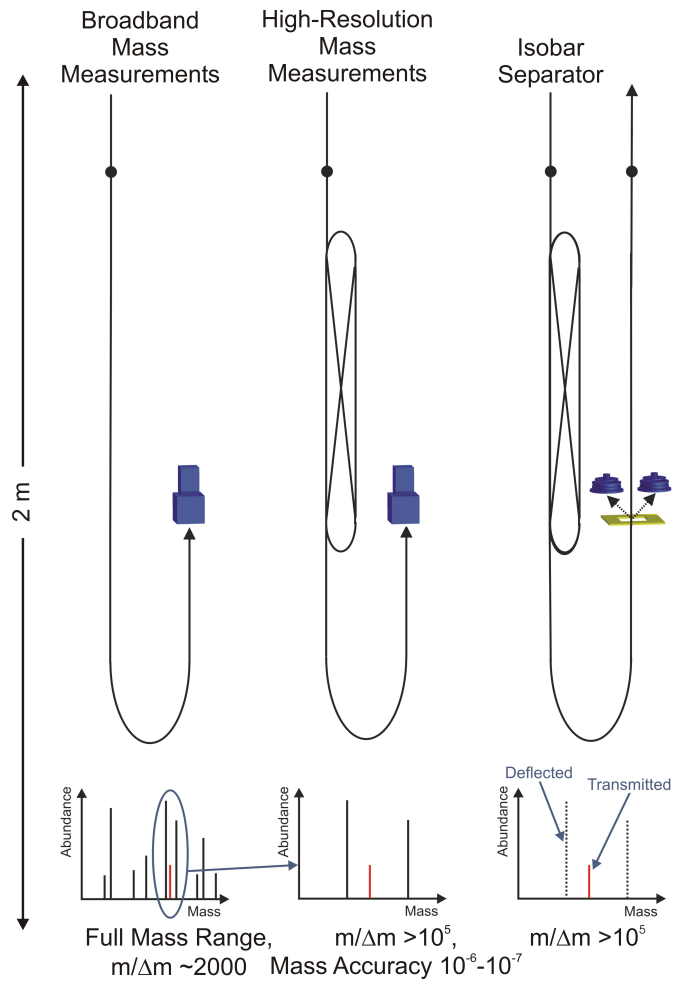


T. Dickel, PhD, 2010

# MR-TOF-MS

- Broadband mass spectrometer for diagnosis of the CIC and adjustment the range bunching
- High precision mass measurements of short-lived nuclei
- Isobar separation with high ion capacity (for e.g. mass-selected decay spectroscopy)

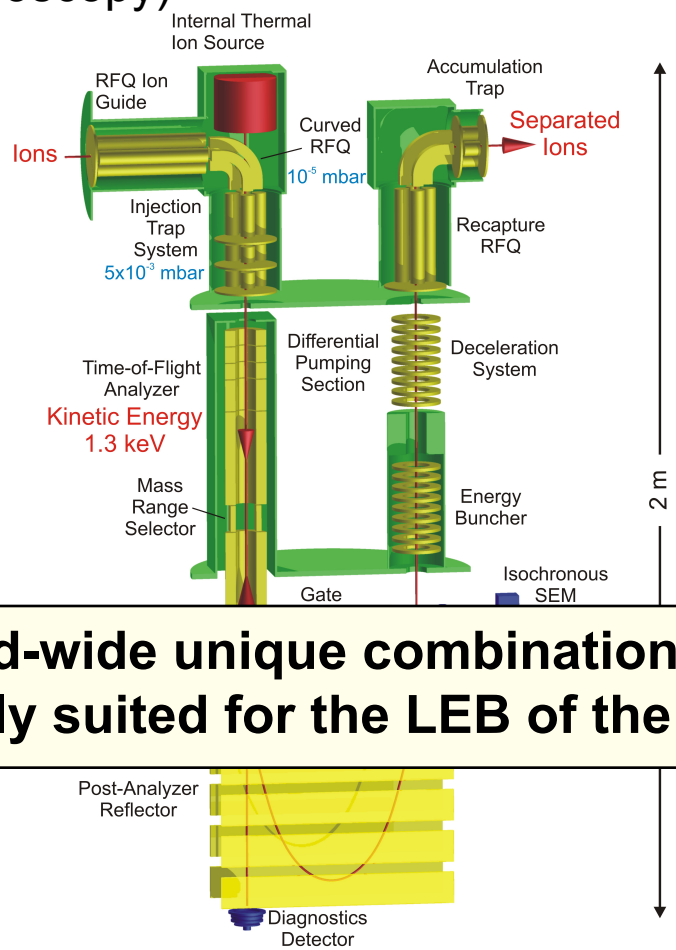


Mass Resolving Power

600,000

Mass Measurement Accuracy

$\sim 10^{-7}$

Measurement Duration

~10 ms

Transmission efficiency

**World-wide unique combination of performance characteristics, ideally suited for the LEB of the Super-FRS.**

~10 ions

T. Dickel, PhD, 2010

# The FRS Ion Catcher
## A Test Facility for the LEB

# FRS Ion Catcher

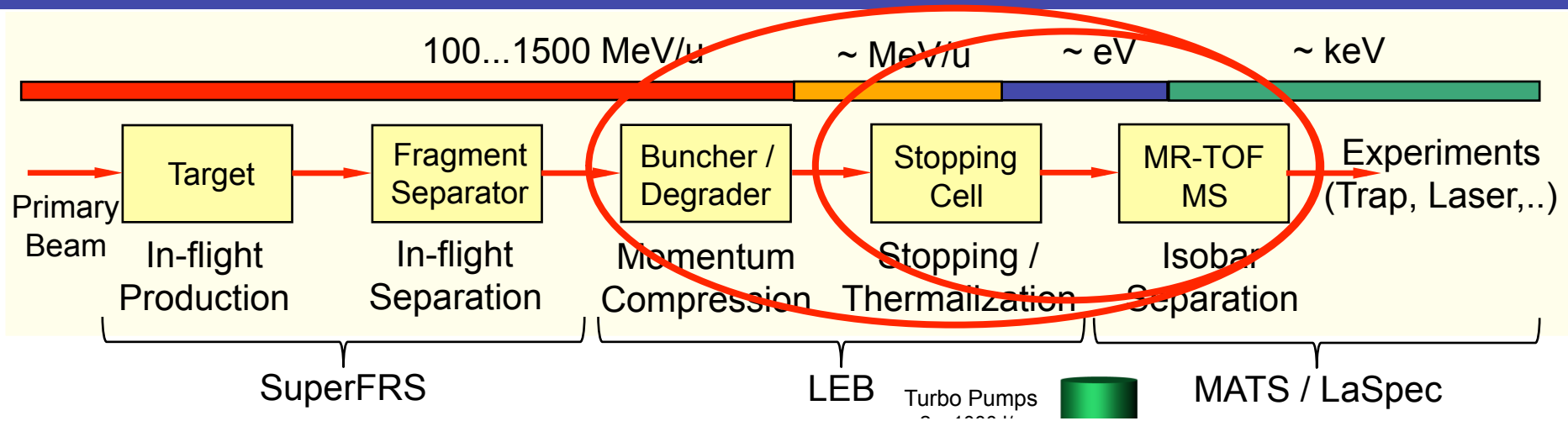


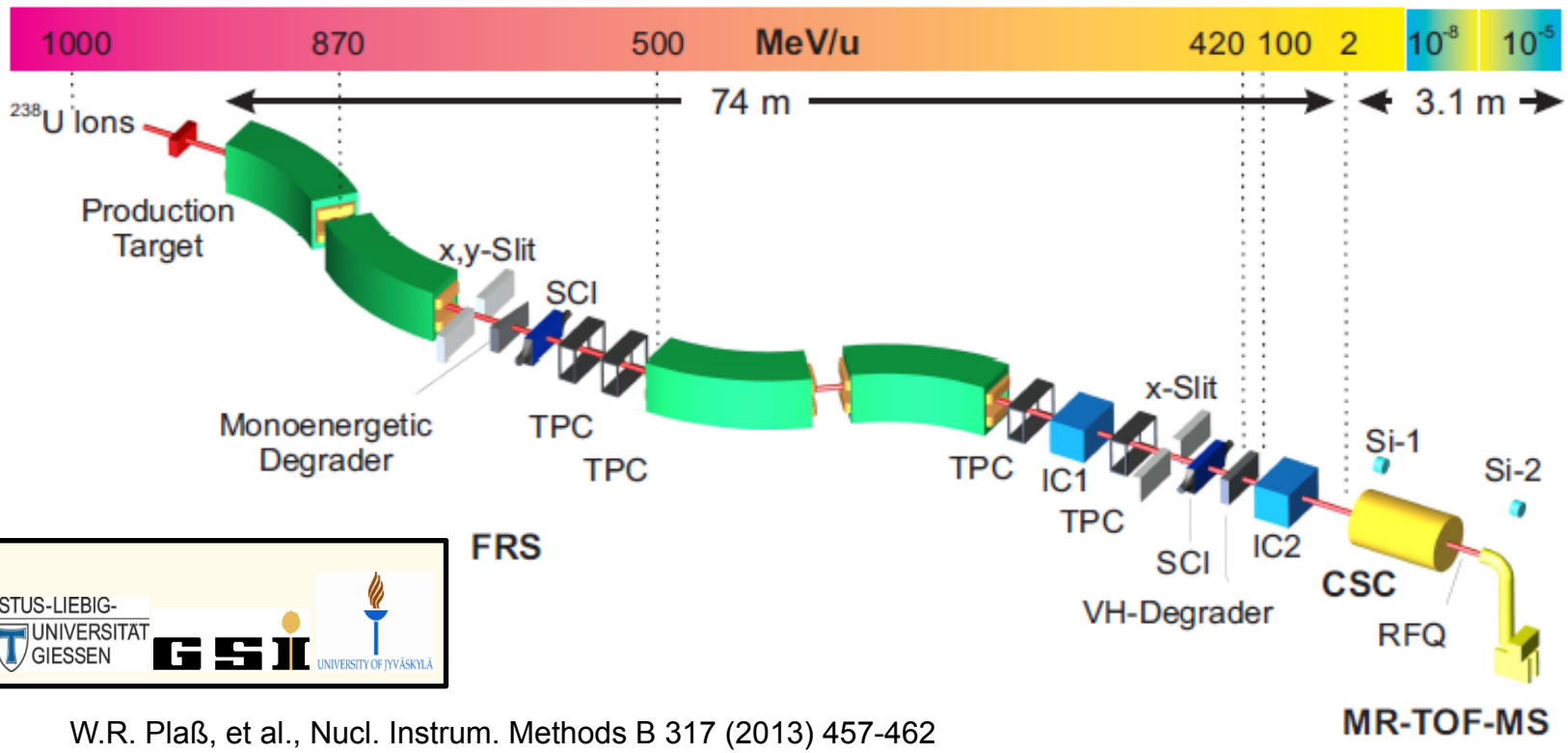


W.R. Plaß, et al., Nucl. Instrum. Methods B 317 (2013) 457-462

# FRS Ion Catcher: Beamtime in July 2012

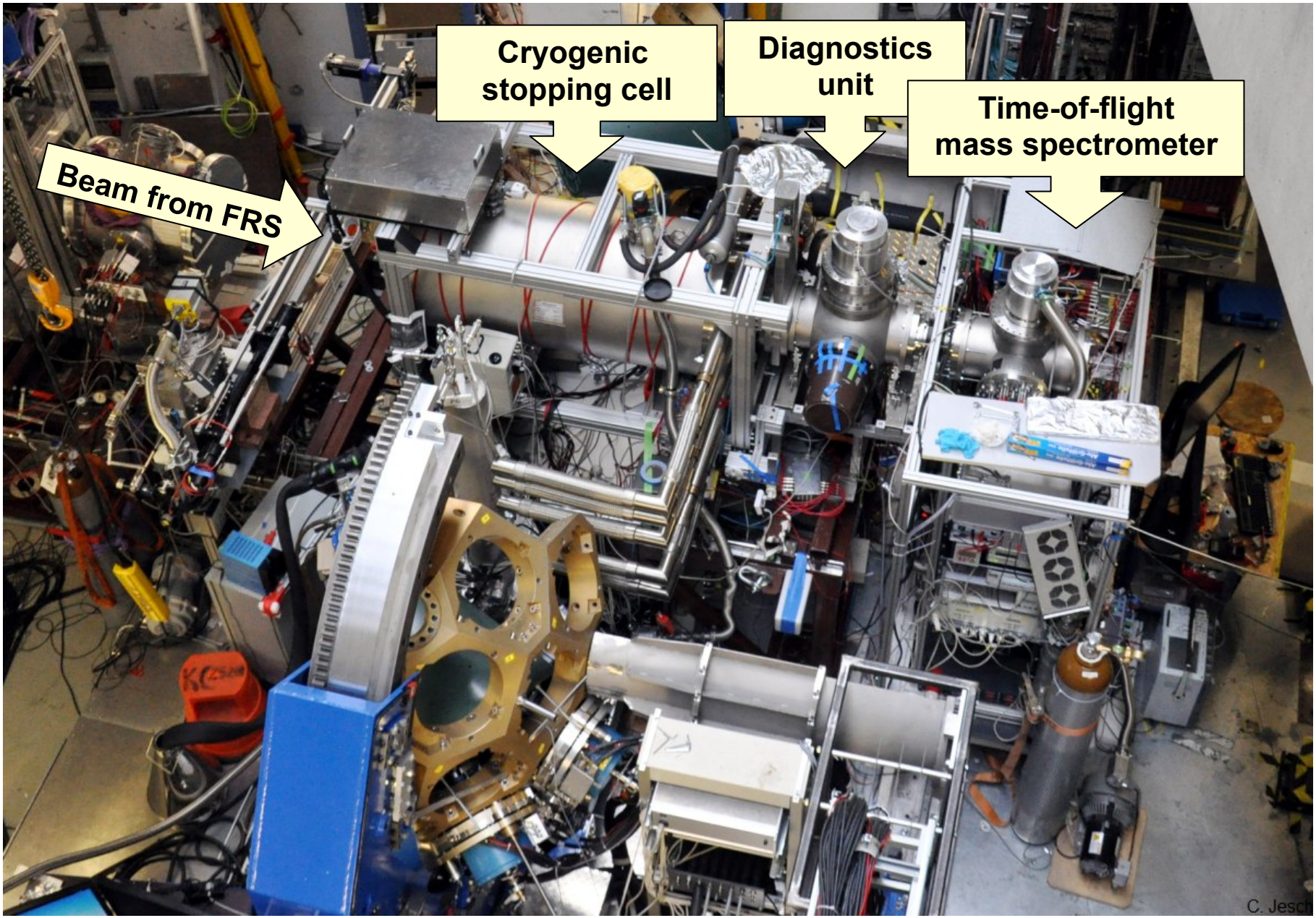

# FRS Ion Catcher: Results

**First on-line operation of a cryogenic stopping cell**

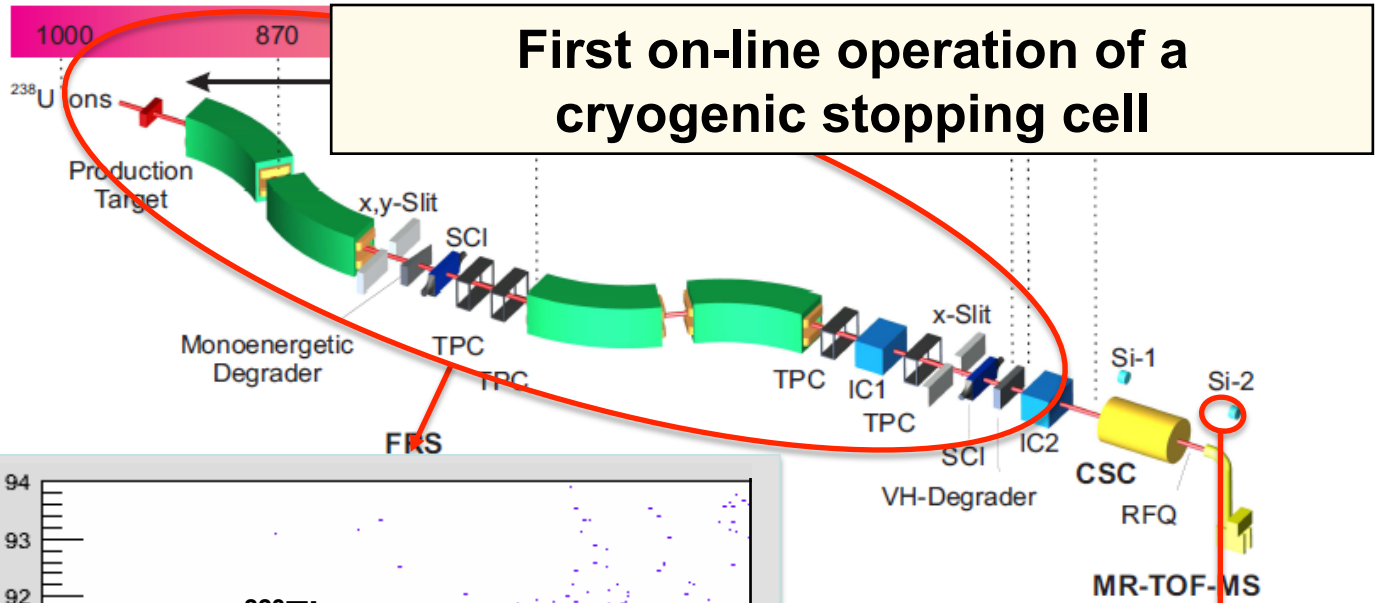


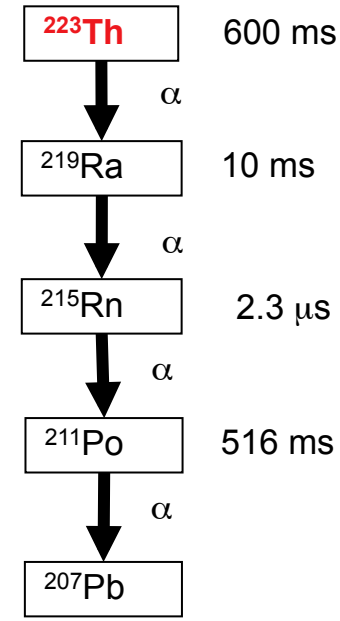


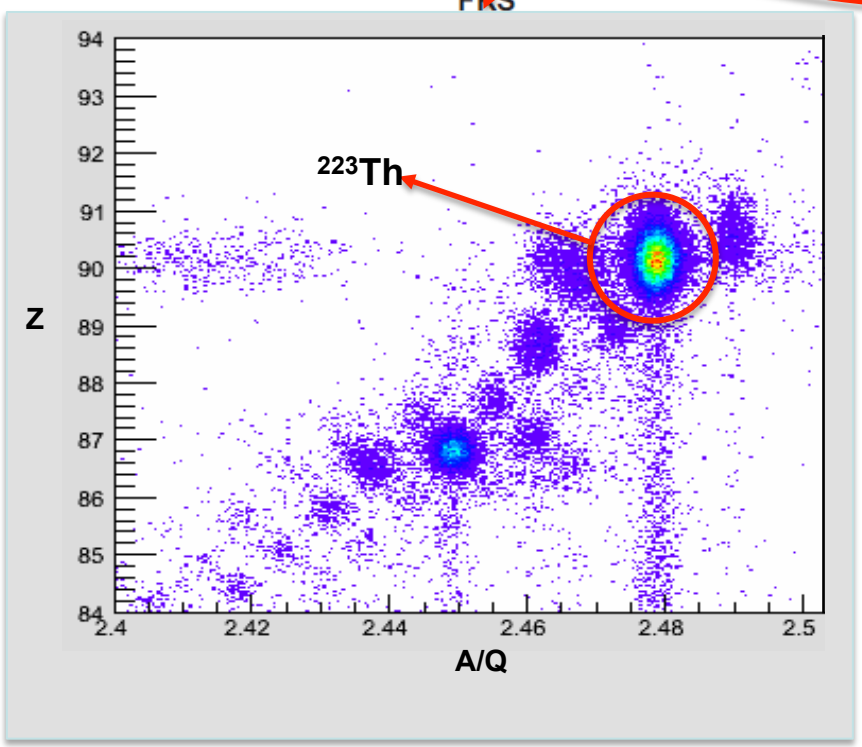


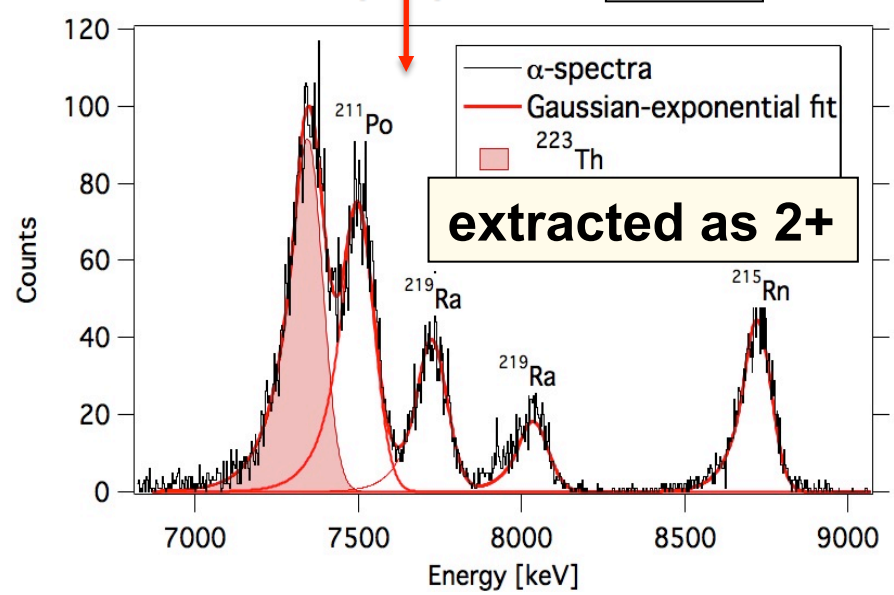

# FRS Ion Catcher Results: Stopping Efficiency

## Range distribution of $^{223}$Th

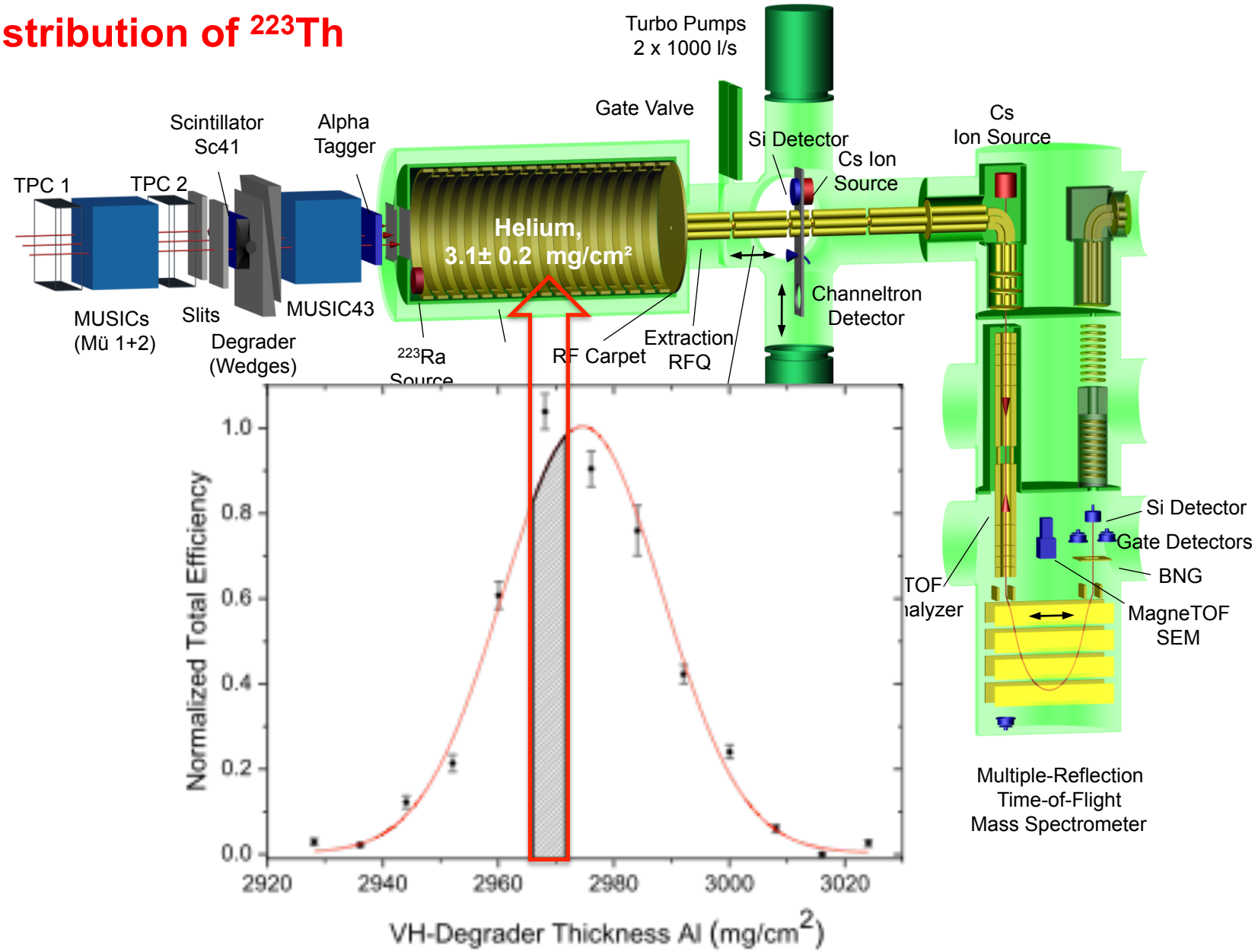

# FRS Ion Catcher Results: Efficiencies

- Total efficiency: of up to 14.5%

  Novel concepts (RF Carpet/high density and cryogenic operation)

  **High efficiency stopping cell**

- Stopping efficiency: up to 27%

  Areal Density: 4.9 mg/cm²

  **Almost 2 times higher gas density compared to other stopping cells using an RF structure**

- Ion survial and extraction efficiency :
  - up to 62%
  - element independent

    Cryogenic Operation

  **Compares favorably with other stopping cells**

Purushothaman S. et al, EPL 104 (2013) 42001

# FRS Ion Catcher Results: Extraction Time ($^{221}$Ac)

Pressure = 49 mbar, temperature = 74.5K
DC field = 23.2 V/cm,
Beam intensity = 1000 Ions/spill (spill length 6ms)

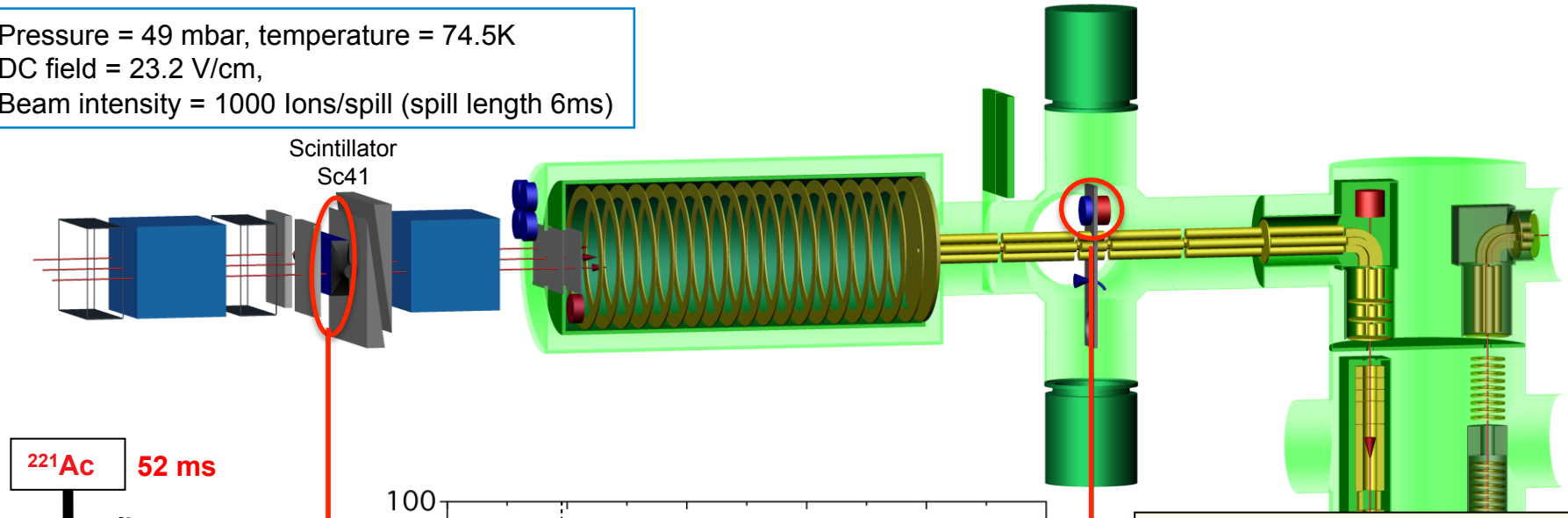


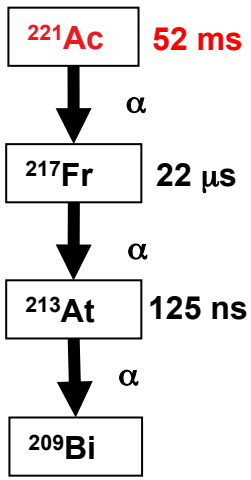


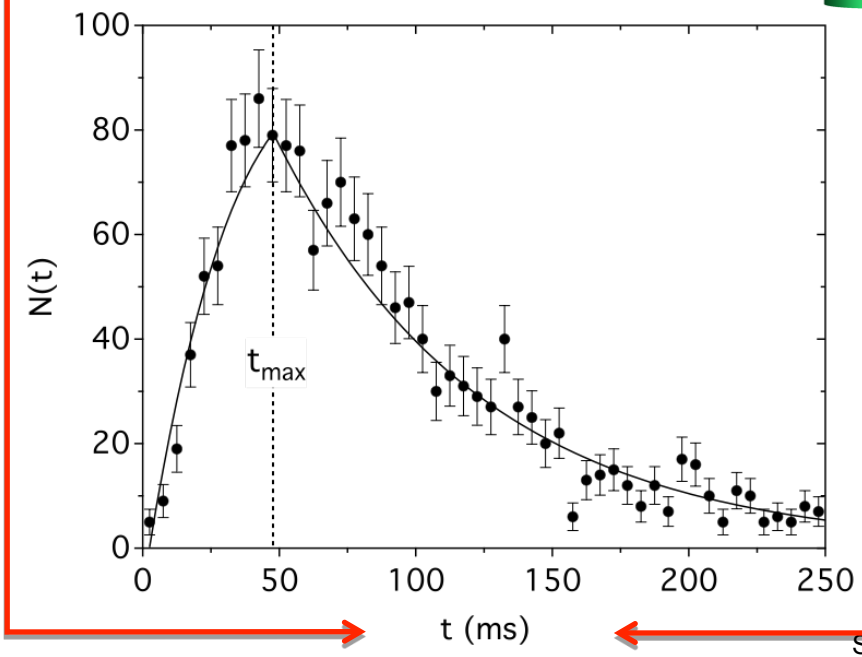


Scintillator time stamps

Si detector timing output

time after ion bunch enters CSC [ms]

**extraction time**

- **off-line: ~ 25 ms**
- **on-line: ~ 24 ms**
- **Theory** ($K_0$=17.5 cm$^2$/Vs): **~ 27.5 ms**

Purushothaman S. et al, EPL 104 (2013) 42001

# FRS Ion Catcher Results: Cleanliness of the CSC

**MR-TOF-MS** (Broadband Measurement)

**Offline with $^{223}$Ra Source (First Prototyp 2005)**

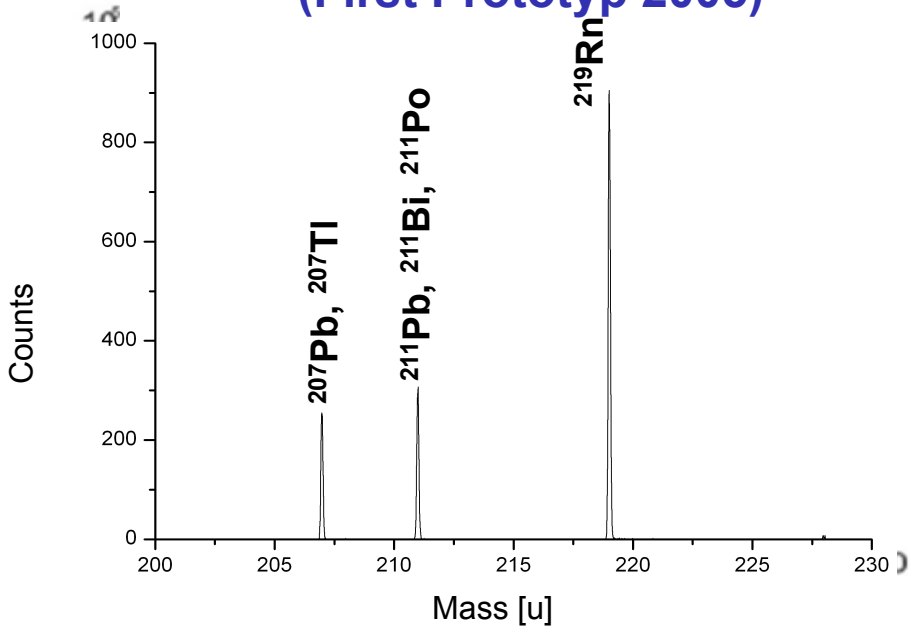


**Online with $^{218}$Rn Beam and $^{223}$Ra source**

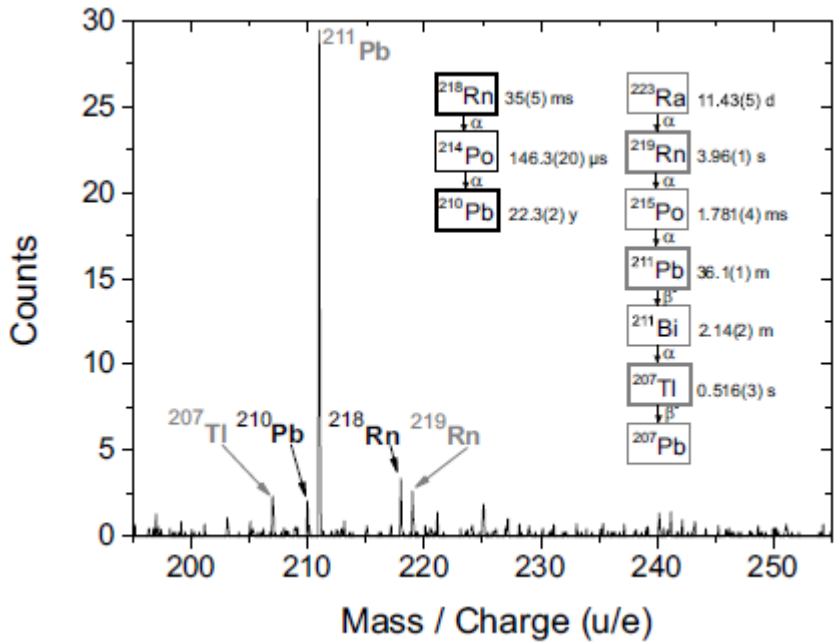


- Broadband mass spectrometry is a necessity for quick and reliable operation of a stopping cell
- Molecular contaminants / adduct formation are not a problem for

**Many orders of magnitude cleaner compared to 2005 GSI experiment (ANL cell)**

# FRS Ion Catcher Results: Mass Measurements

**First direct mass measurement of $^{213}$Rn ($T_{1/2}$ = 19.5 ms)**

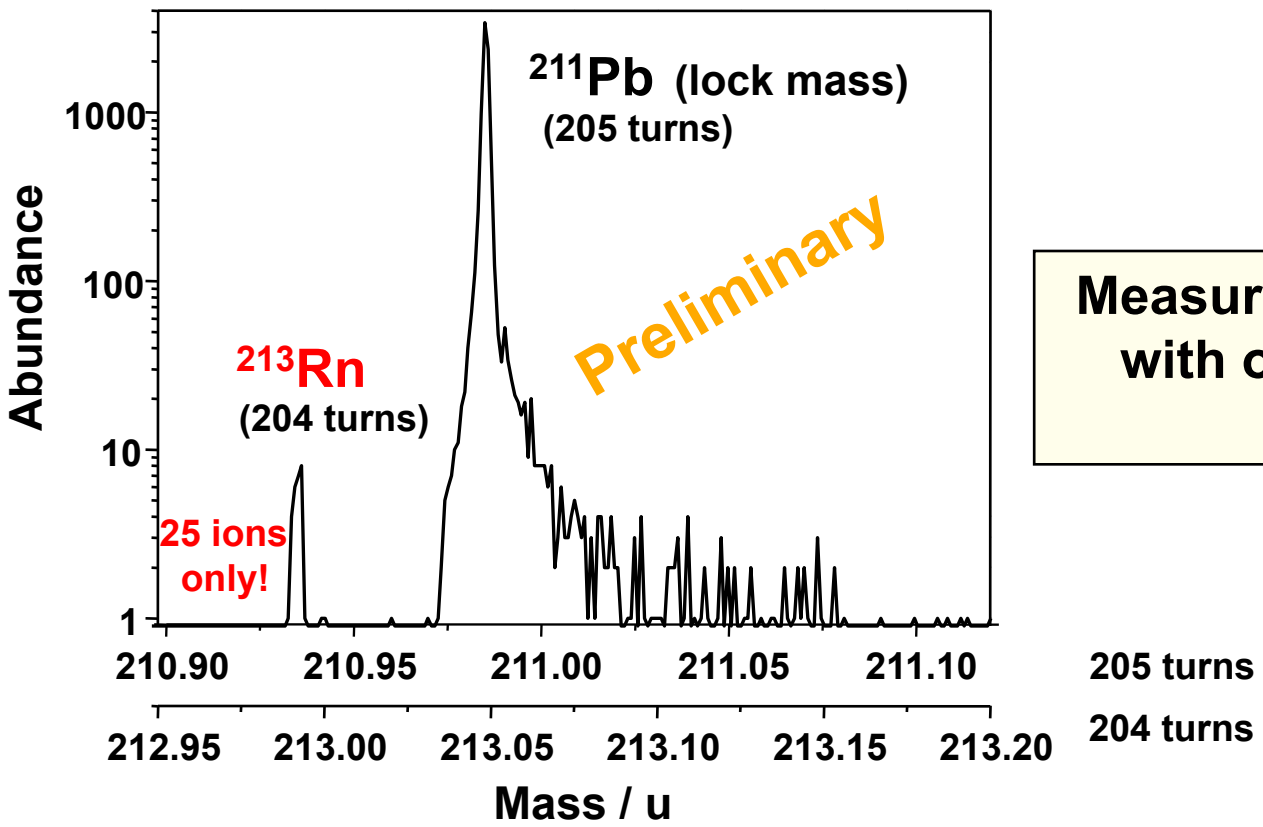


**Measurement performed with only 4 ions/hour detected**

Calibrating with different turns

- measure not only different isobars at the same time
- measure all isobars of neighboring mass numbers

# Summary

- FRS Ion Catcher as a test bench for the LEB commissioned
- Successful test of novel concepts:
  - first online operational CSC
  - highest density stopping cell with RF structures
  - highest resolution time-of-flight mass spectrometer

- High total efficiency of up to 15%
  for relativistic projectile fragments: $^{238}$U(1GeV/u+Be) → (A~220)
- Extraction time of about 25 ms measured
  agrees with offline measurements and theory
- $^{223}$Th extracted as 2+, no formation of adducts, clean mass spectrum
  → excellent cleanliness
- Mass measurements with MR-TOF-MS,
  eg. $^{213}$Rn (half-life: 19.5ms)

# Outlook: 2014

## Beamtime in September 2014:

- Higher gas density
- Study Cleanliness and temperature effects
- MR-TOF-MS operation as isobar separator
- Stopping of fission fragments (large emittance)
- High intensity operation, space charge and plasma limitations

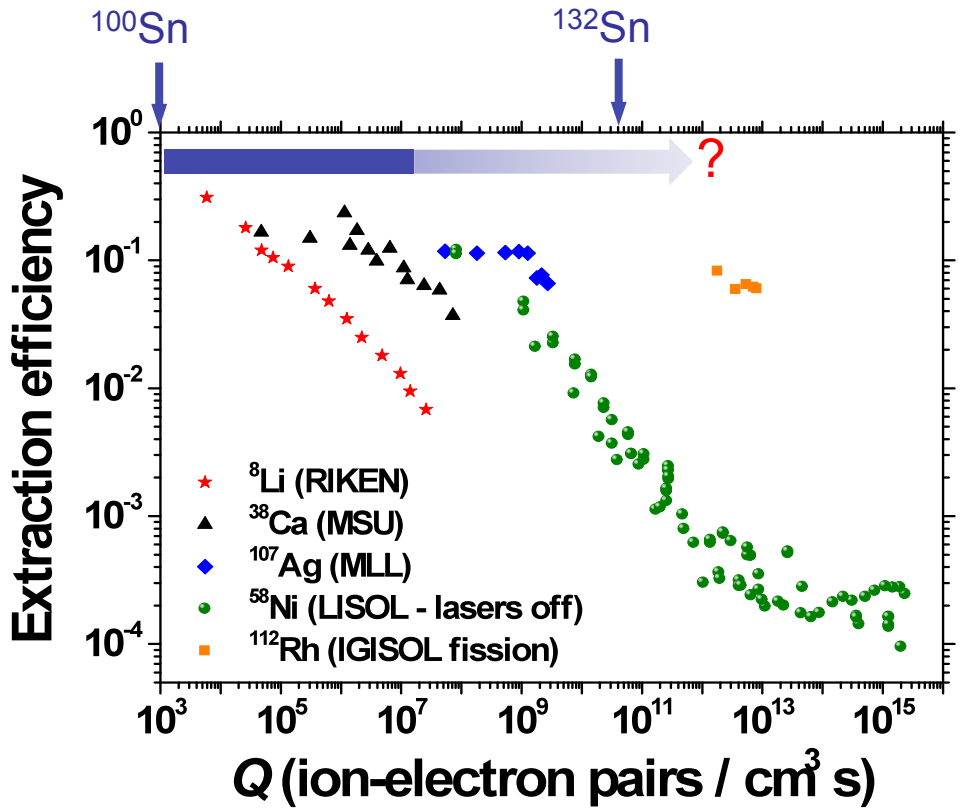


I.D. Moore, NIM B 266 (2008) 4434

# Acknowledgements

## FRS Ion Catcher / S411 Collaboration

F. Amjad[2], S. Ayet[2], T. Dickel[1,2], P. Dendooven[3], M. Diwisch[1], J. Ebert[1], A. Estrade[2], F. Farinon[2], H. Geissel[1,2], F. Greiner[1], E. Haettner[1], C. Jesch[1], N. Kalantar-Nayestanaki[3], R. Knoebel[2], J. Kurcewicz[2], J. Lang[1], I. Moore[4], C. Nociforo[2], M. Petrick[1], M. Pfuetzner[2], W.R. Plaß[1,2], S. Pietri[2], A. Prochazka[2], S. Purushothaman[2], M. Ranjan[3], M.P. Reiter[1], A.-K. Rink[1], S. Rinta-Antila[4], C. Scheidenberger[2], M. Takechi[2], Y. Tanaka[2], H. Weick[2], J.S. Winfield[2], M.I. Yavor[5]

[1] II. Physikalisches Institut, Justus-Liebig-Universität Gießen, Gießen, Germany

[2] GSI Helmholtzzentrum für Schwerionenforschung, Darmstadt, Germany

[3] KVI, University of Groningen, The Netherlands

[4] University of Jyväskylä, Jyväskylä, Finland

[5] Institute for Analytical Instrumentation, RAS, St. Petersburg, Russia

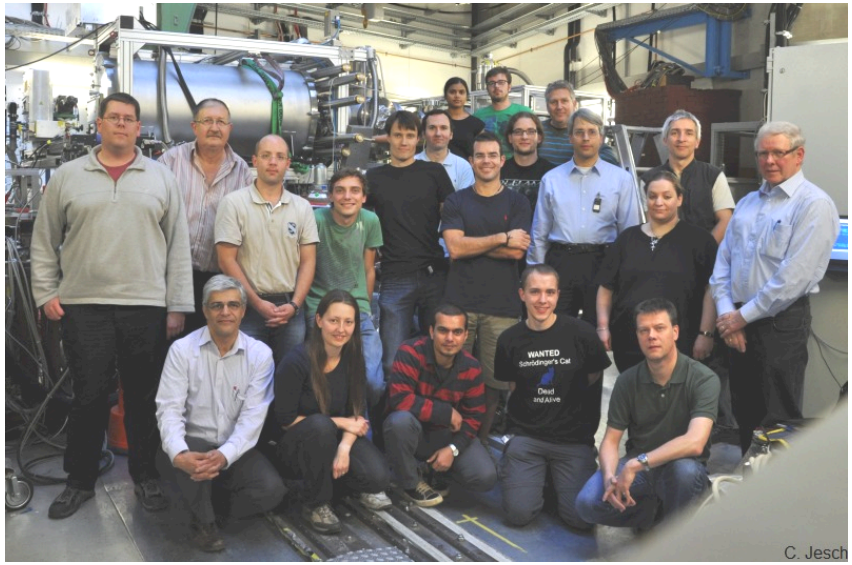


## IONAS Group at JLU Gießen

S. Ayet, T. Dickel, M. Diwisch, J. Ebert, H. Geissel, F. Greiner, E. Haettner, C. Horbach, C. Hornung, C. Jesch, R. Knöbel, J. Lang, W. Lippert, W.R. Plaß, M.P. Reiter, A.-K. Rink, C. Scheidenberger, B. Sun, M. Yavor

Funding: **Univ. Groningen** and **GSI,**
**EC** (FP7)**, ENSAR** (262010), GSI F&E (GIMET2)
**BMBF** (06GI185I,06GI9114I,05P12RGFN8)