First measurements of the antiproton-nucleus annihilation cross section at 125 keV

Luca Venturelli

for

H. Aghai-Khozani[1;2], D. Barna[3;4], M. Corradini[5;6], R. Hayano[4], M. Hori[1;4], T. Kobayashi[4], M.Leali[5;6], E. Lodi-Rizzini[5;6], V. Mascagna[5], M. Prest[7;8], A. Soter[1], K. Todoroki[4], E. Vallazza[9], L. Venturelli[5;6], N. Zurlo[5;6]

1 Max-Planck-Institut für Quantenoptik, Hans-Kopfermann-Strasse 1, D-85748 Garching, Germany
2 Physics Department, CERN, 1211 Geneva 23, Switzerland
3 Wigner Institute for Particle and Nuclear Physics, H-1525 Budapest, Hungary
4 Department of Physics, University of Tokyo. Tokyo 113-0033, Japan
5 Dipartimento di Ingegneria dell'Informazione, Università di Brescia, I-25123 Brescia, Italy
6 Istituto Nazionale di Fisica Nucleare, Gruppo Collegato di Brescia, I-25123 Brescia, Italy
7 Università degli Studi dell'Insubria, I-22100 Como,Italy
8 Istituto Nazionale di Fisica Nucleare, Sezione di Milano Bicocca, I-20126 Milano, Italy
9 Istituto Nazionale di Fisica Nucleare, Sezione di Trieste, I-34127 Trieste, Italy

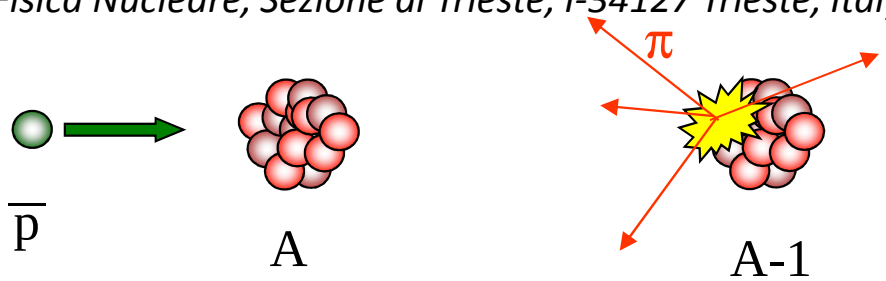

ASACUSA Collaboration @ CERN-AD

Atomic **S**pectroscopy **A**nd **C**ollisions
Using **S**low **A**ntiprotons
~ 40 members

Spokesman:
R.S. Hayano, Tokyo University

	Tokyo RIKEN	MEXT, Japan RIKEN
	Aarhus	Danish natural science foundation, ISA
	RMKI Debrecen	OMFB TeT OTKA
	CERN	
	STEFAN MEYER INSTITUTE	Austrian Academy of Sciences
	Brescia	INFN

1) Spectroscopy of p̄He

HORI's talk

2) Antihydrogen production and spectroscopy

MURTAGH's talk
DIERMAIER's talk
SAUERZOPF's posters
MASCAGNA's poster

3) p̄ annihilation cross-section

ASACUSA Nuclear Program

$\bar{p}$-A annihilations σ

- @ 5.3 MeV done (Ni, Sn, Pt)

PLB 2011 & NIMA 2013

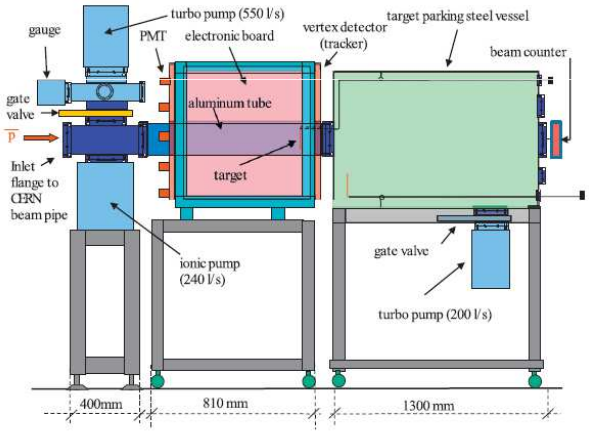

Fig. 1. Experimental setup.

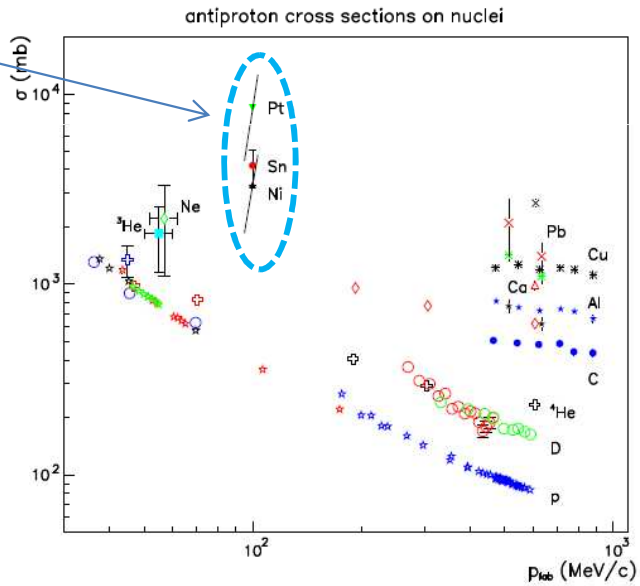

- @ ~ 100 keV in progress

EPJ+ 2012

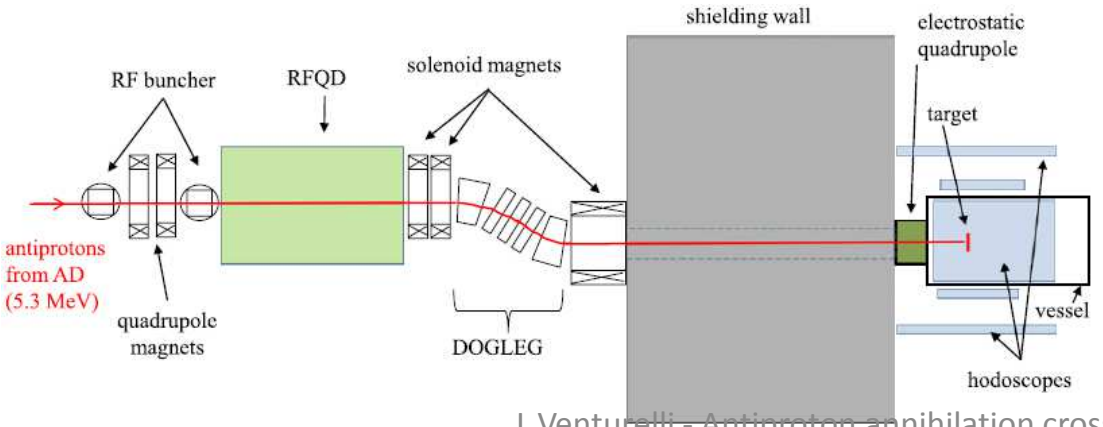

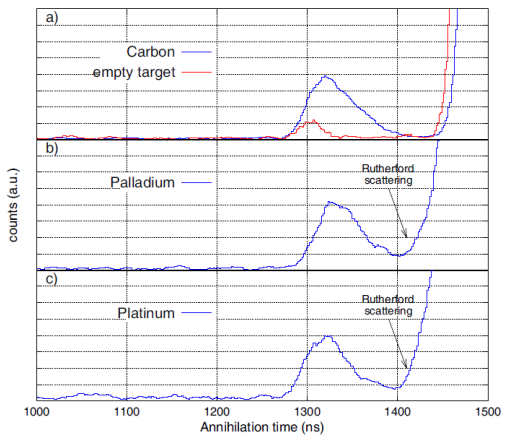

Physics motivations

- Cosmology: matter-antimatter asymmetry in the Universe

  (One possibility is that antimatter is distributed non-homogeneously in the Universe within the so-called "islands" of antimatter . In the border region between matter and antimatter, the role of annihilation is important.)

- Search of resonances
- Determine the potential parameters
- Probe the external region of nucleus

  (both potential models and phenomenological analyses state that the annihilations occur in a thin region placed just outside the nuclear volume: neutron/proton ratio or the extraction energy of the peripheral nucleons can be determined)

- Saturation: σ_{ann} (pbarA) does not increase with A as naively expected

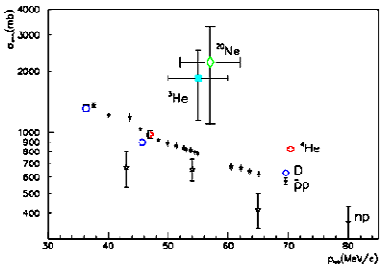

- Reversed nbar to pbar behavior for σ_{ann} at 5 MeV on Sn *FRIEDMAN*'s talk
- …the region below 0.5-1 MeV is completly unexplored

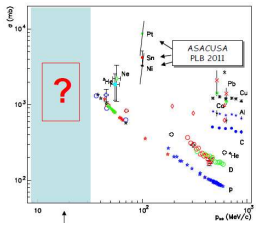

Antiproton Decelerator (AD) - CERN

AD is the only source of low-energy antiprotons

All-in-one machine: antiproton capture , deceleration & cooling

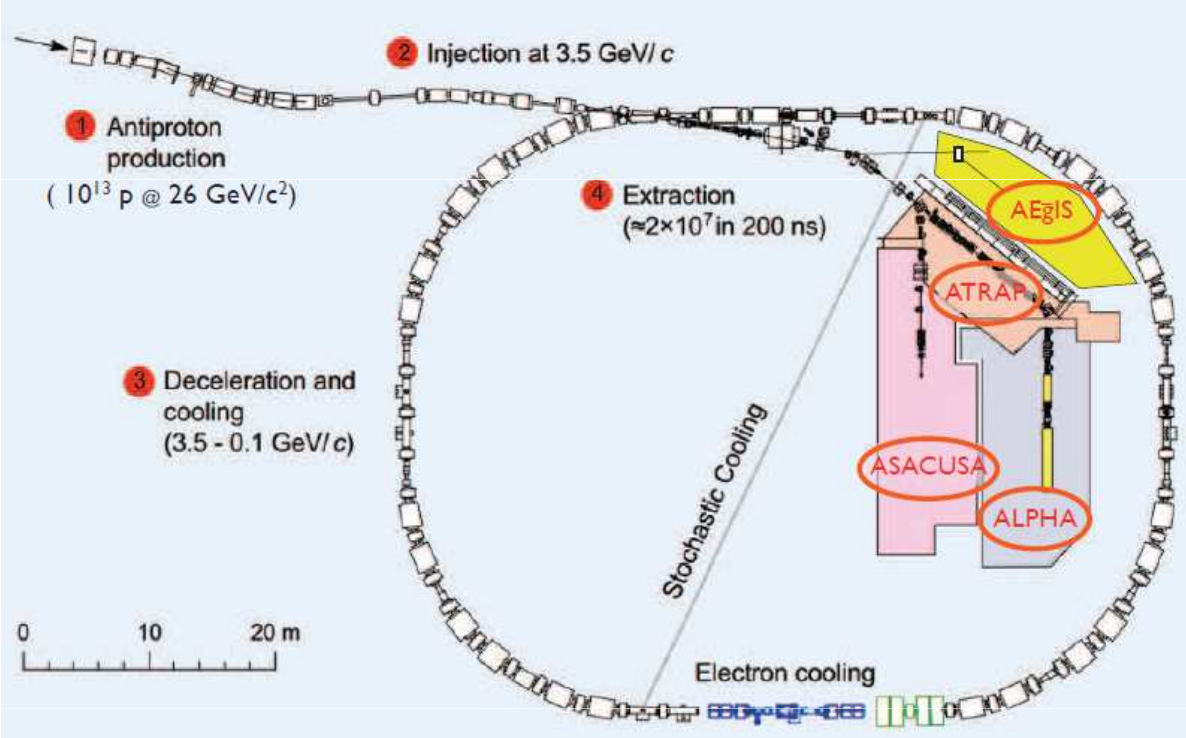

AD delivers to the experiments :

- 2-4 10^7 antiprotons per bunch (150-300 ns length)
- 1 bunch/ 100 s
- Energy = 5.3 MeV (100 MeV/c)

Experiments (2014):

- ALPHA, ATRAP, ASACUSA, ACE, AEgIS, BASE

Further deceleration in ASACUSA

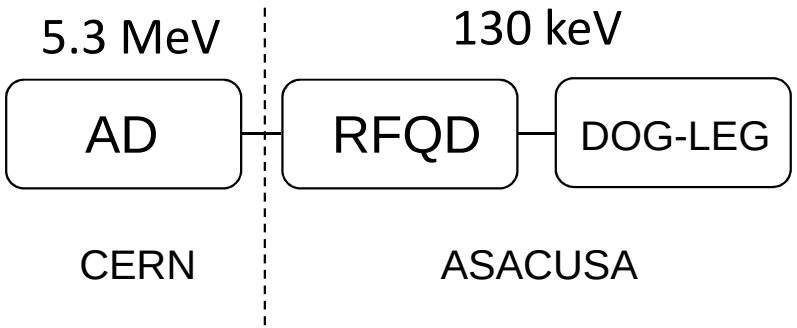

Technique of the annihilation σ measurement

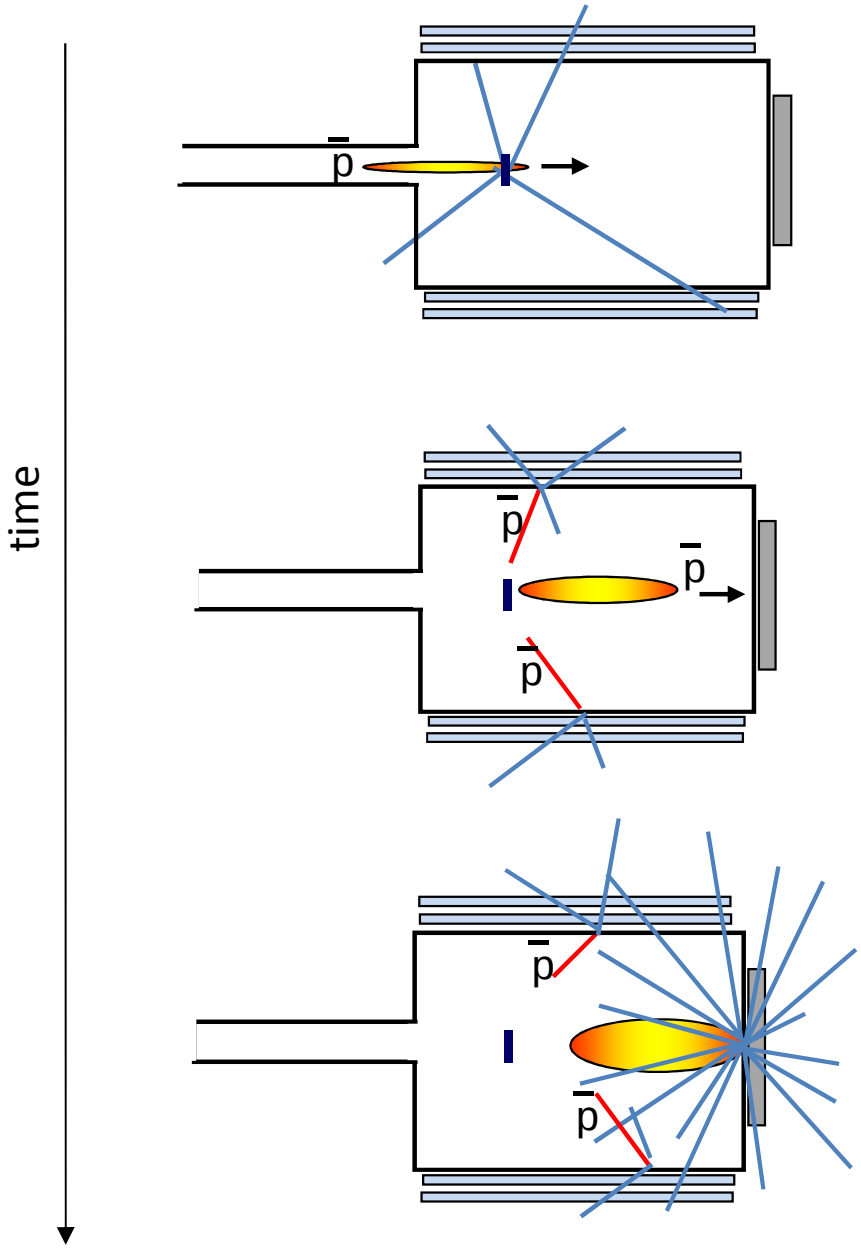

$$\sigma_{ann}(\bar{p}A) \div \frac{N_{events}}{N_{beam}}$$

counted by Vertex detector

counted by Beam monitor & by Rutherford annihilations

Main problem:

- Antiproton beam from AD is pulsed :
  a) several coincident annihilations saturate the acquisition;
  b) overlapping of target signal and annihilations on the walls

To separate signal from background:

- Long & large vessel (L=1.7 m, ϕ=1.2 m)
- Beam chopper to reduce the pbar bunch length
- Slits along the beam-line to reduce beam halo
- Thick wall to screen detector from π–>μ–>e
- Ultra-thin targets

Why ultra-thin targets?

Not only to reduce the in-flight annihilations and to avoid pbar E_K degradation, but especially for …

antiprotons scattered at $\approx 90^\circ$ will stop in the target

Scale dimensions:

Target thickness $\Delta x \approx 10\,\mathrm{nm}$

Target radius $D \approx \mathrm{cm}$

antiproton range (@100keV) $R \approx \mu\mathrm{m}$

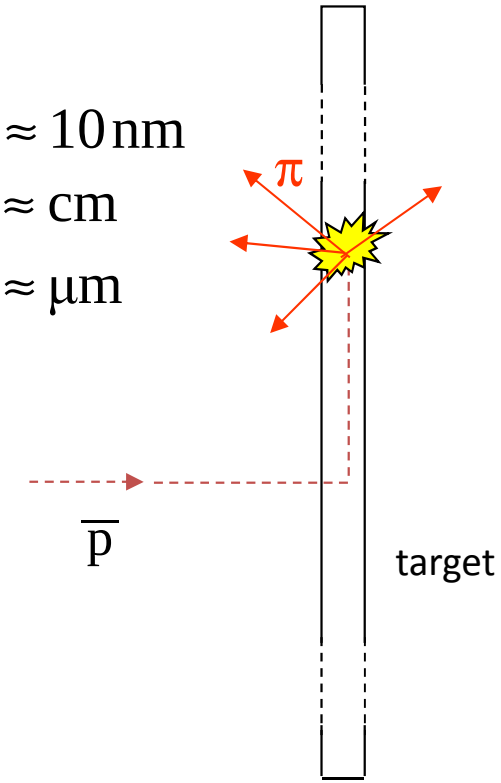

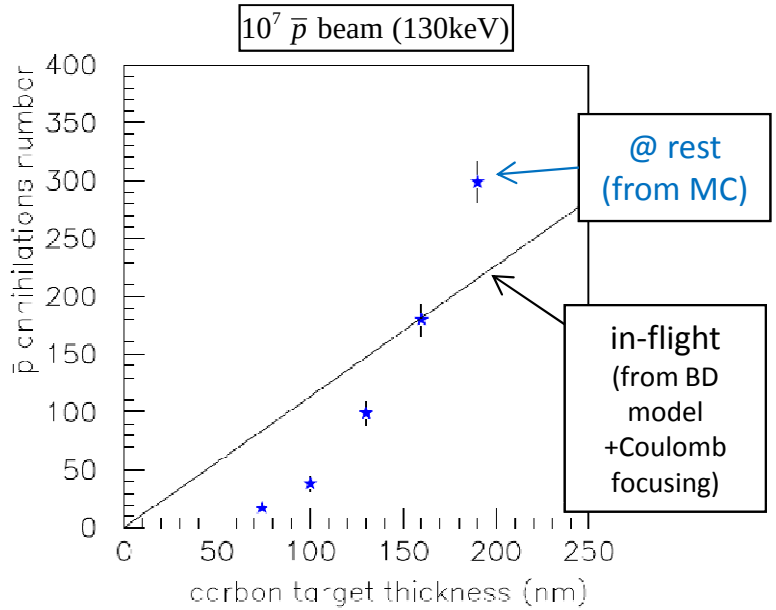

For C target (70 nm) the expected pbars @ rest are much less than in-flight annihilations

⇒ ultra thin targets needed

Experimental set-up

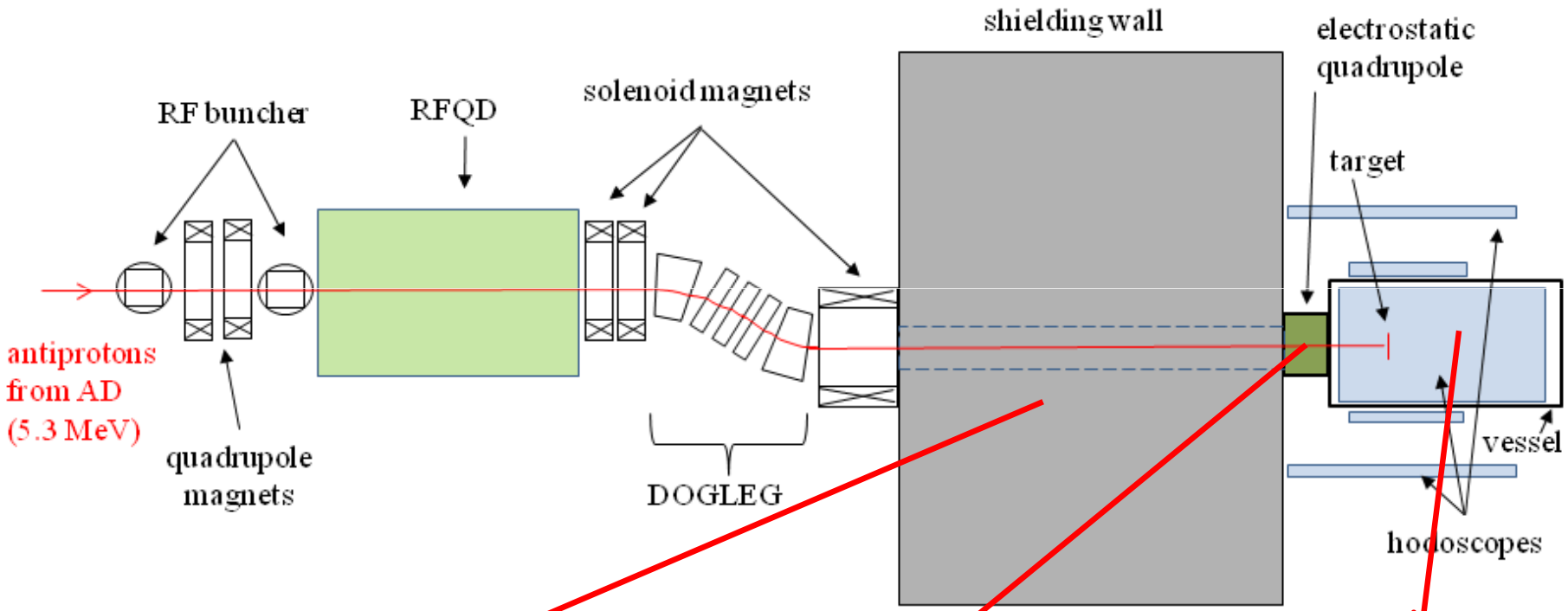

Experimental set-up

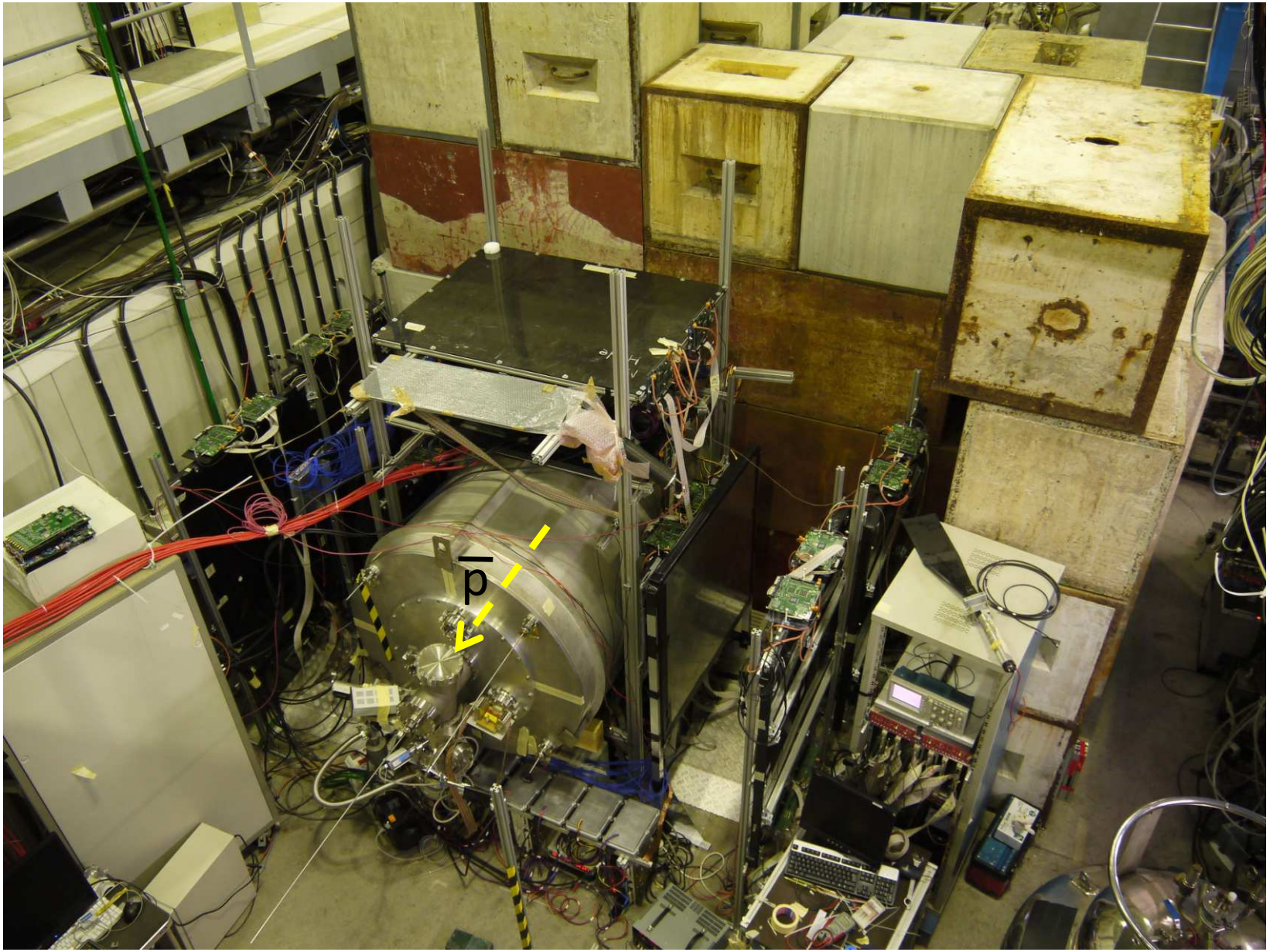

Detectors

Antiproton annihilations detector: DET1

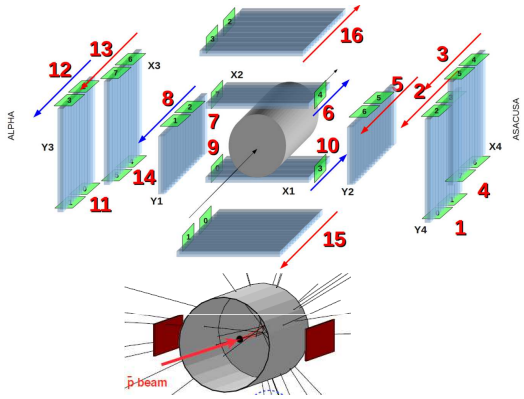

DET2

Beam position monitor

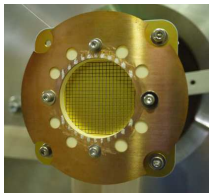

Beam intensity monitor

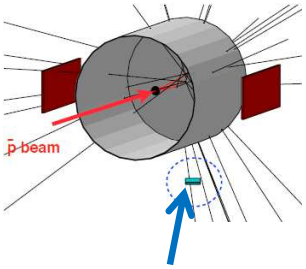

Cherenkov detector

DET1

Several modules of different dimensions

→ MASCAGNA's poster

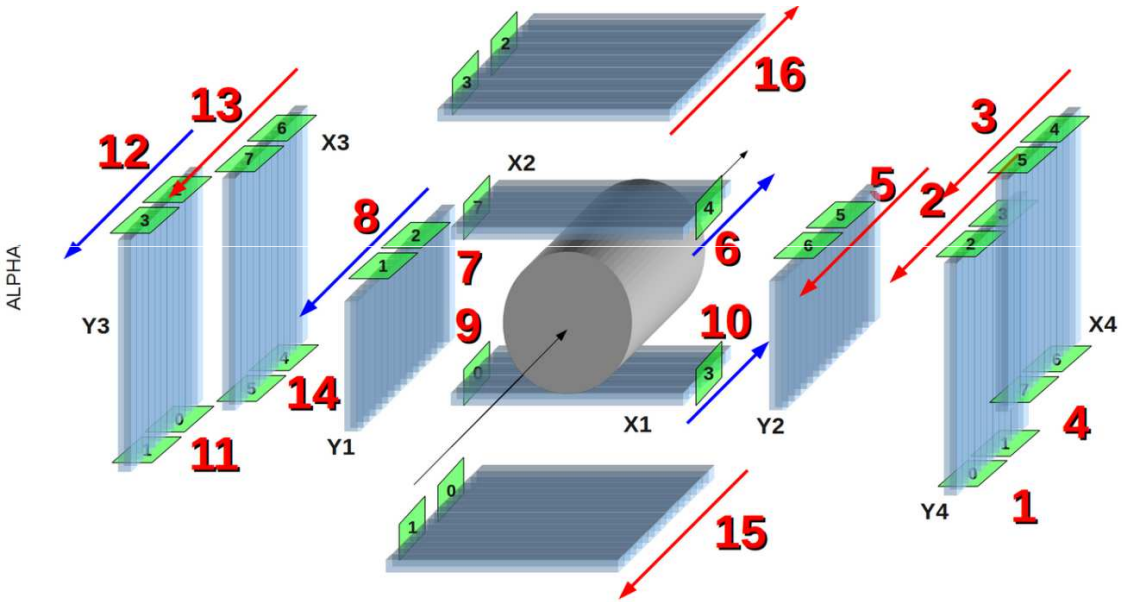

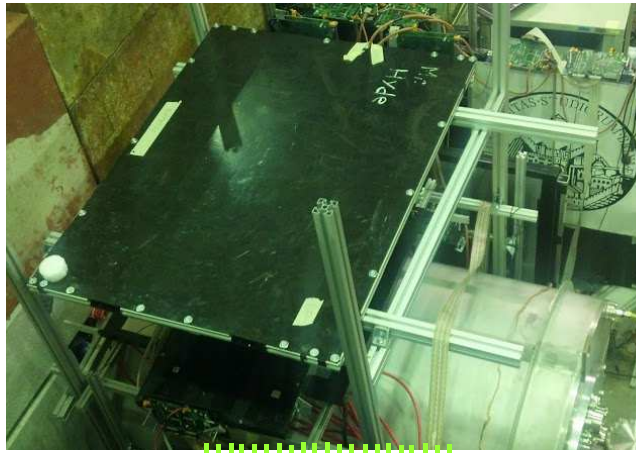

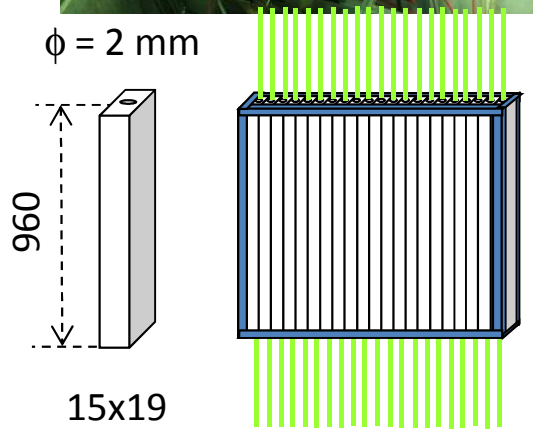

62 bars -> two 64-ch multi-anode PMTs

500 scintillator bars readout by PMTs

double information:
- Annihilation vertex reconstruction
- annihilation time

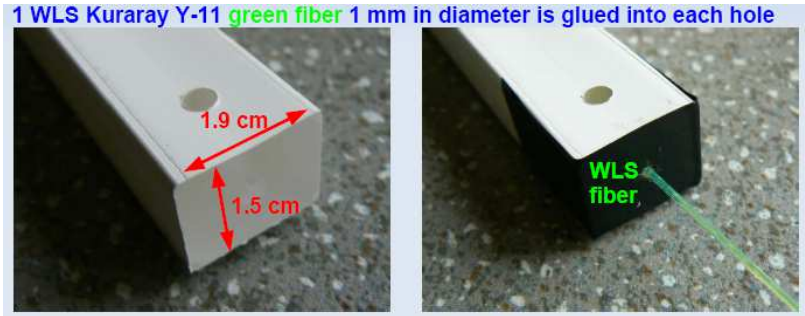

Scintillator bar

DET2

two modules (~1 × 1 m^2 each),

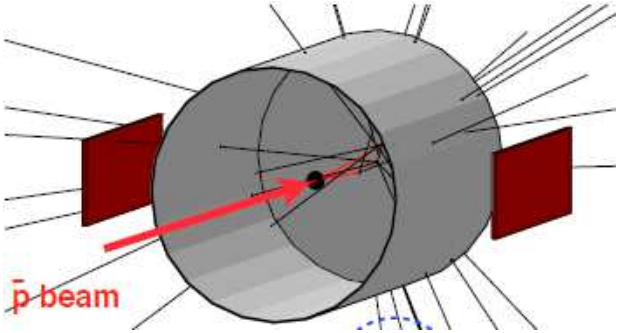

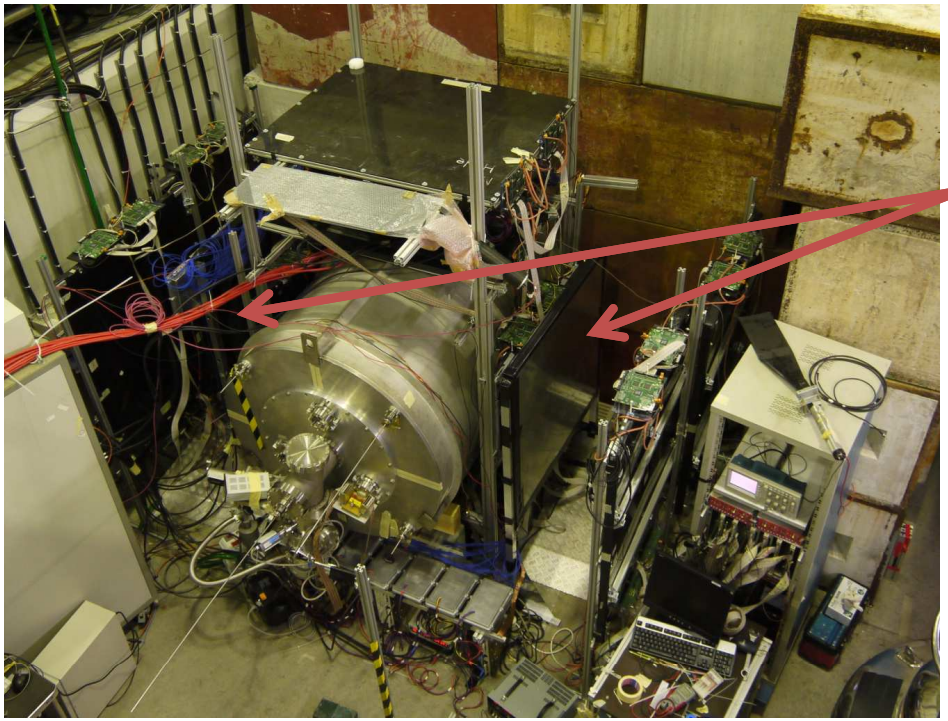

modules

100 scintillator bars readout by MPPCs (multi-pixel photon counters)

Antiproton beam monitors

- Beam position monitor

-Secondary emission electron detector

-Placed (& removable) at the target position

- Resolution 4 mm

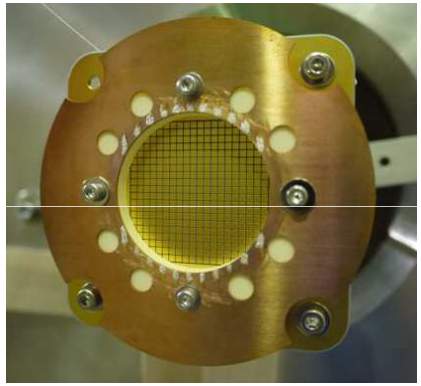

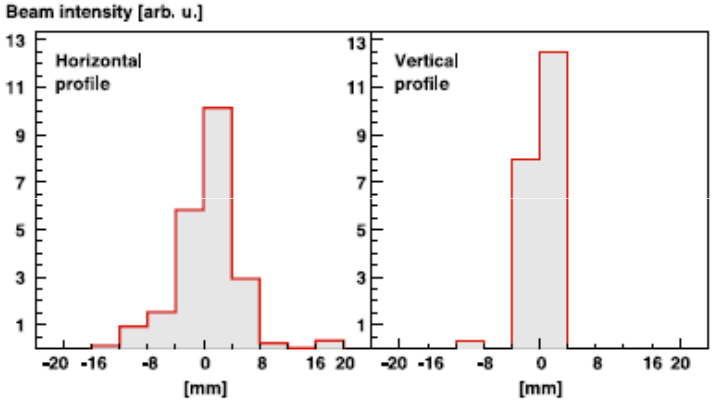

- Beam intensity monitor

- Cherenkov detector

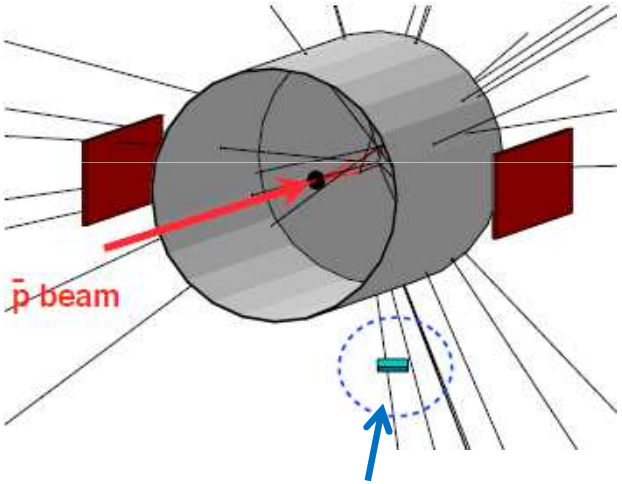

Cherenkov detector

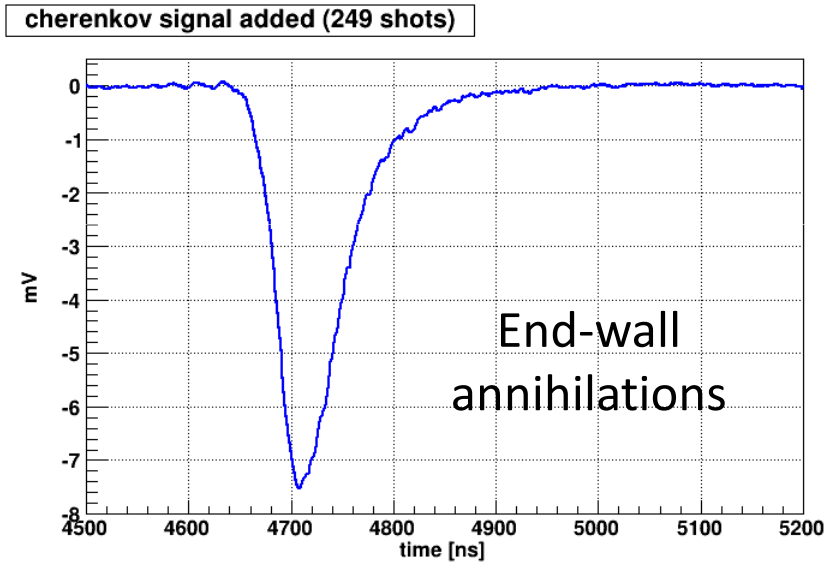

Targets

Ultra-thin targets:

- carbon foil (70 nm)
- carbon foil (70 nm) + Pd (20 nm)
- carbon foil (70 nm) + Pt (5 nm)

Made @ TUM

Steel ring frame: $\Phi_{int} = 8\,cm \quad \Phi_{ext} = 13\,cm$

target parking vessel

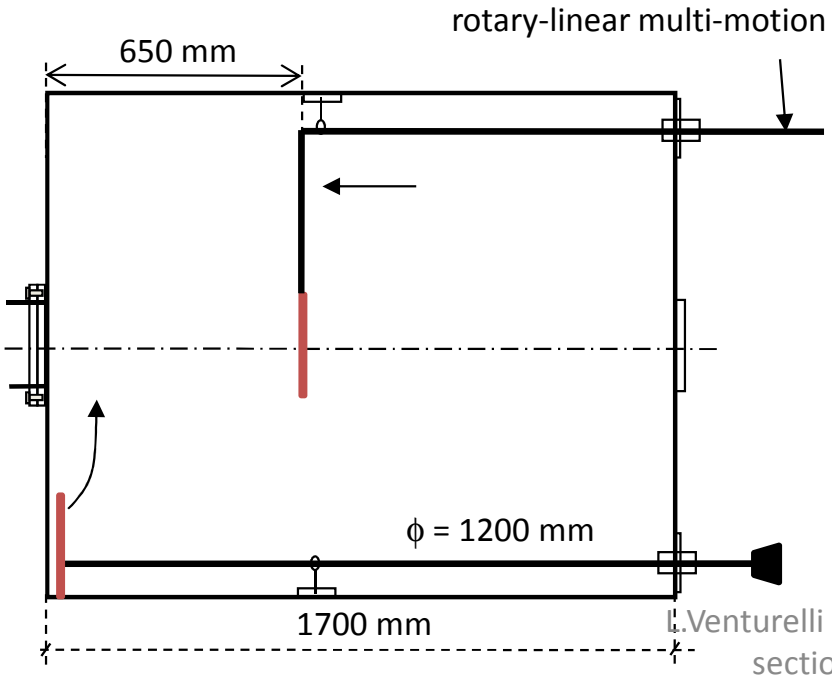

Targets measurements @ LNL

Rutherford Back Scattering measurement:

2 MeV Alpha scatterd at 165° ; spot 1x1 mm^2

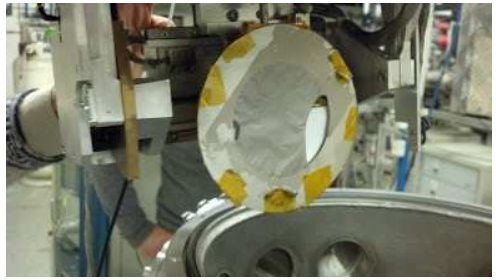

C+Pd

	nominal µg/cm^2	nominal 1E15 at/cm^2	measured 1E15at/cm^2	measured nm
Pd	24	135.8	**139** (+- 4)	20.4 (ρ=21.45 g/cm^3)
C	16	803	**720** (+- 35)	71.7 (ρ=2 g/cm^3)

C+Pt

	nominal µg/cm^2	nominal 1E15 at/cm^2	measured 1E15 at/cm^2	measured nm
Pt	10.7	33	**43.8** (+-3%)	6.62 (ρ=21.45g/cm^3)
C	16	803	**768** (+-5%)	76.5 (ρ=2 g/cm^3)

C target not measured (destroyed)

Measure thicknesses are consistent with the nominal values

Good thickness uniformity (better than 5%)

Annihilations time

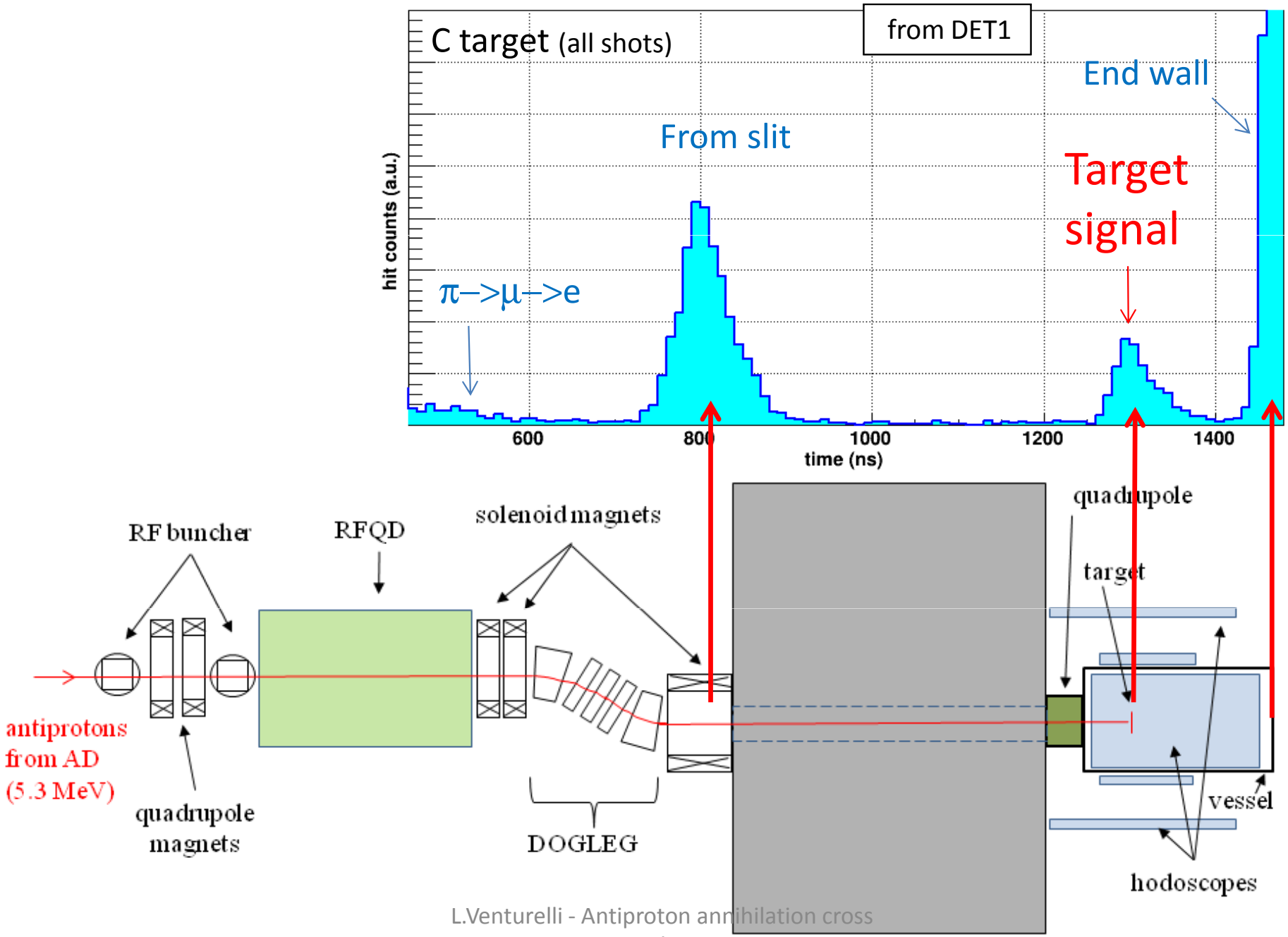

Annihilations time

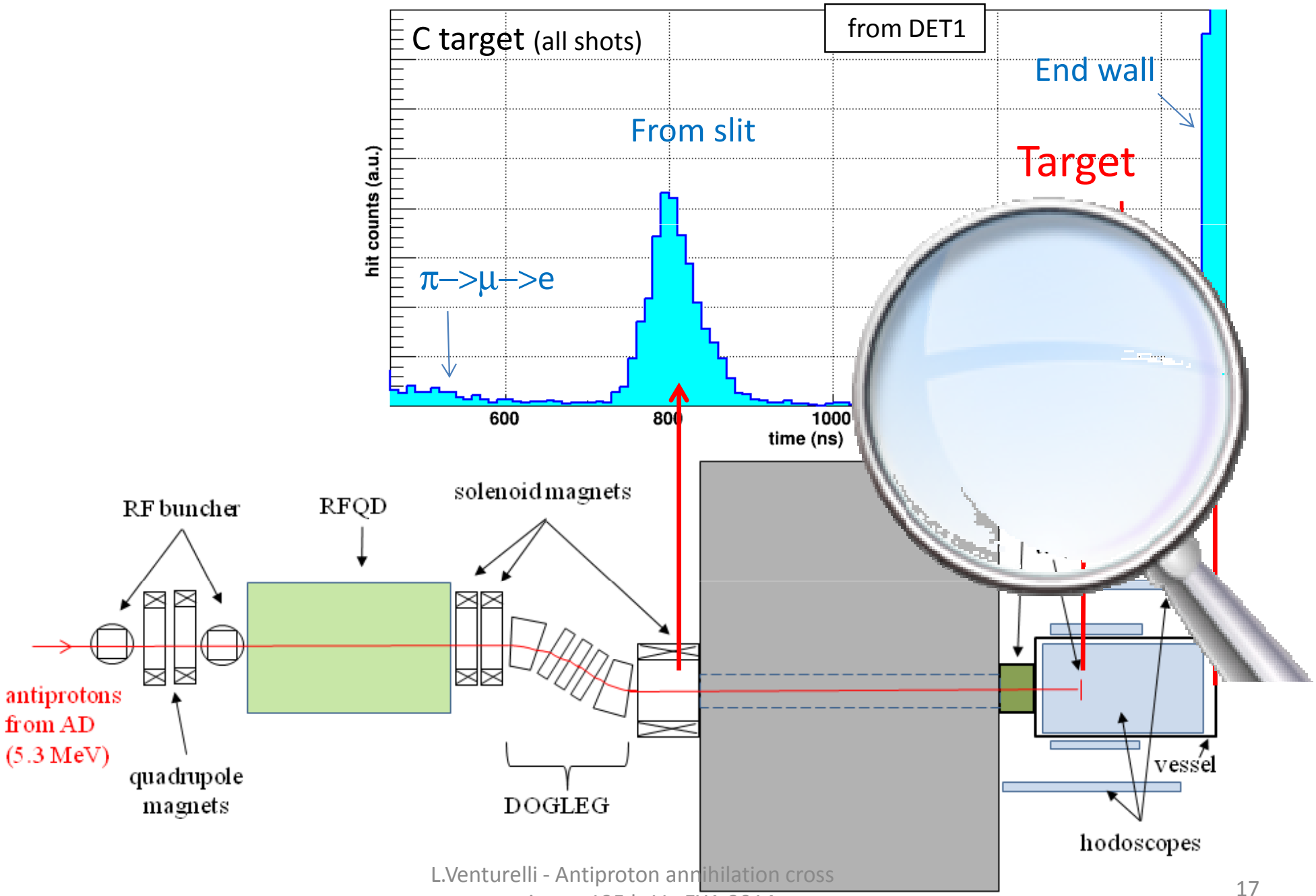

Data from DET1

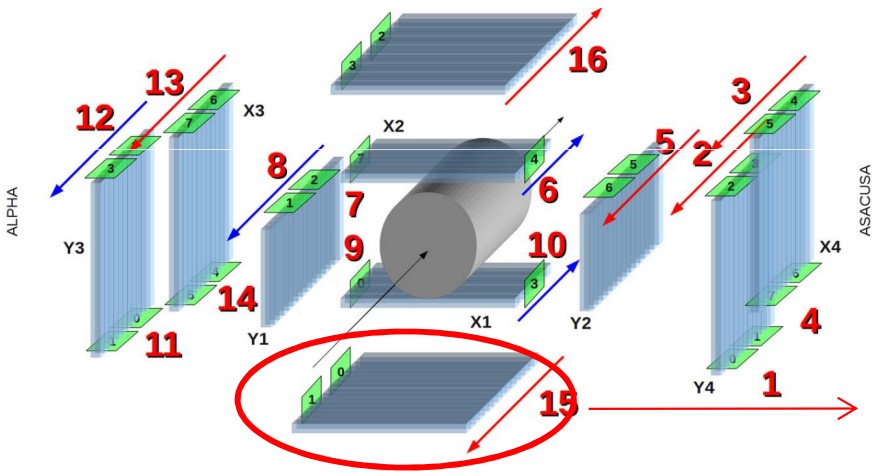

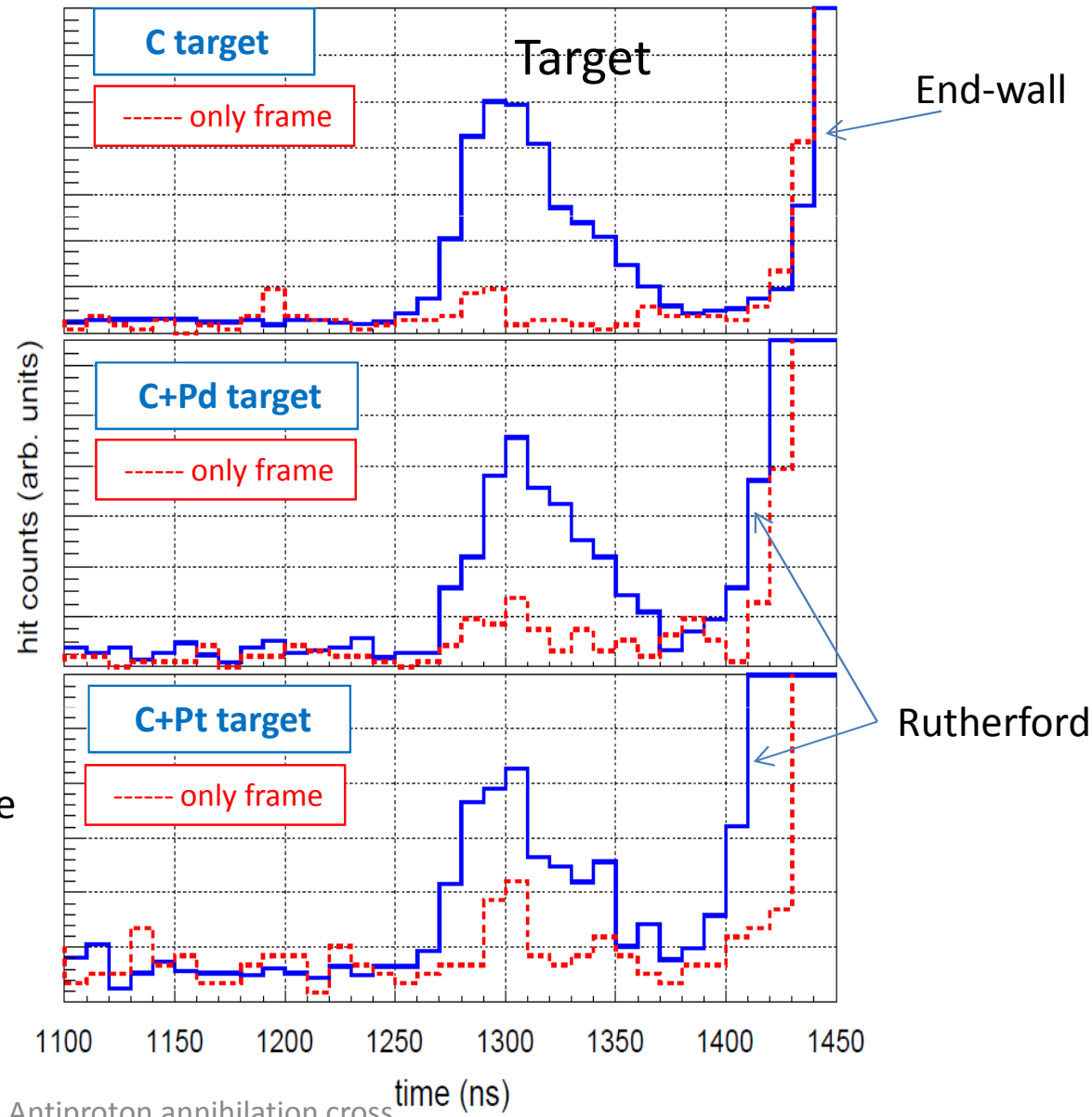

– Target signal is well separated from walls bkg

– π-μ-e bkg and pbar beam halo are acceptable

Data from DET2

analog waveform is recorded for each bar

Peak finding algorithm

Distribution of all the peaks of all the channels

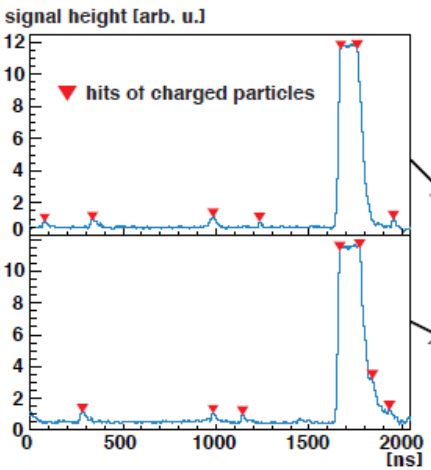

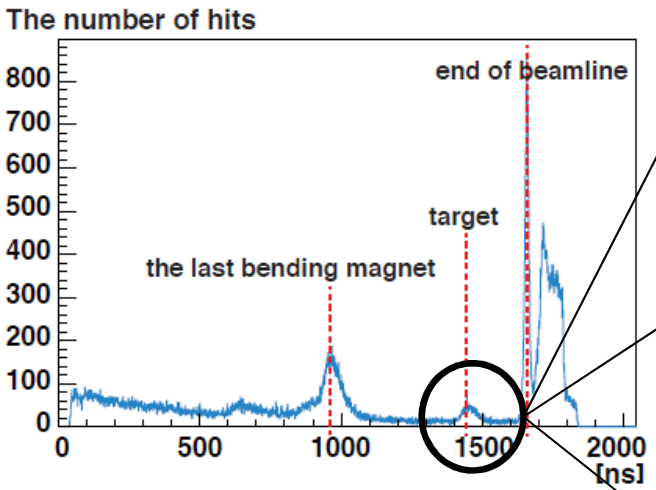

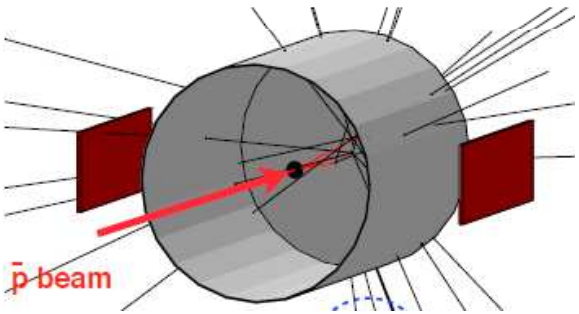

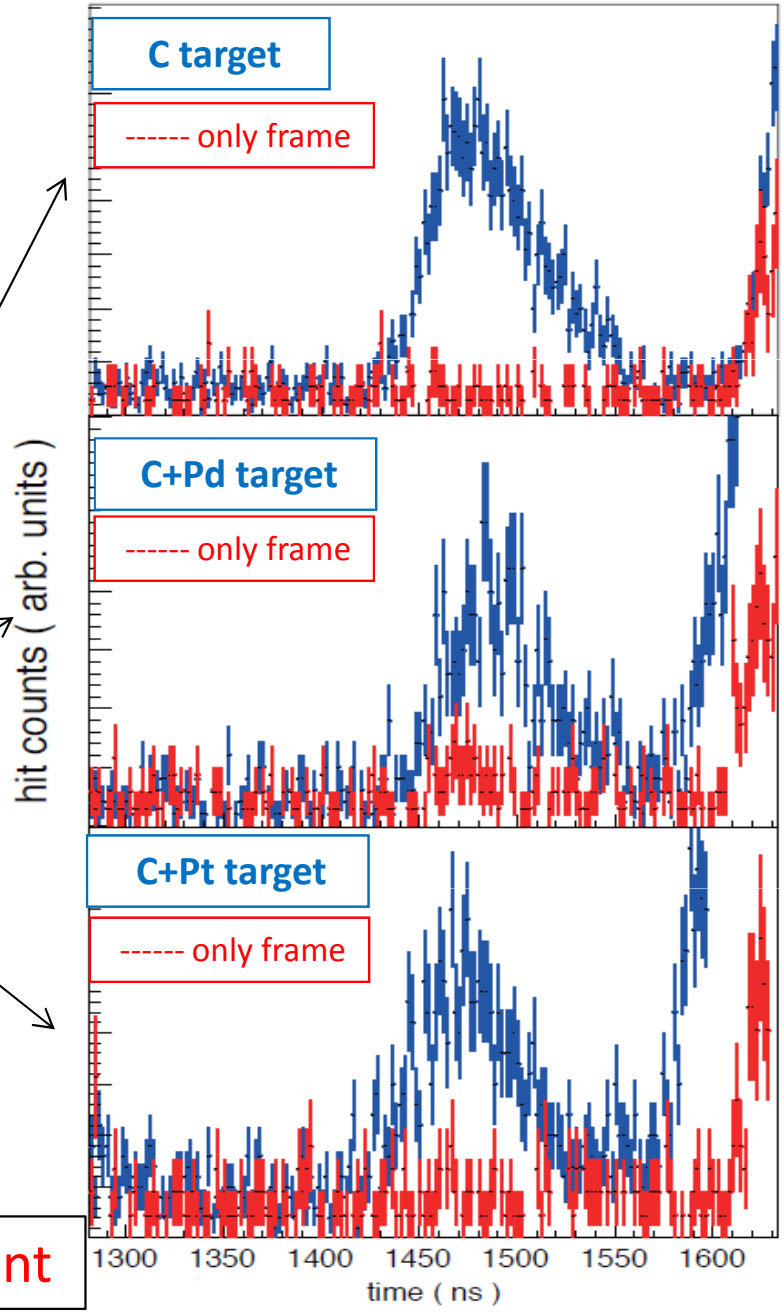

Data from DET1 and from DET2 are in agreement

Data analysis

$$\sigma_{ann}(\bar{p}A) \div \frac{N_{events}}{N_{beam}}$$

In-flight annihilations

$$N_{events} = N_{tot} - \left(N_{halo} + N_{\pi-\mu-e} \right) - N_{rest}$$

from Monte Carlo

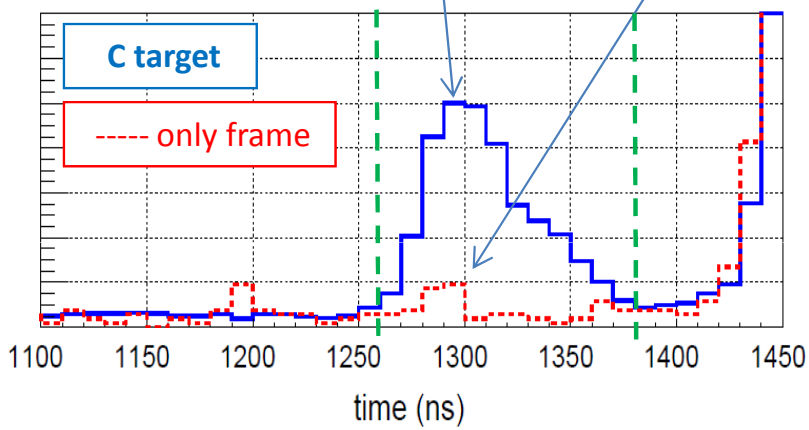

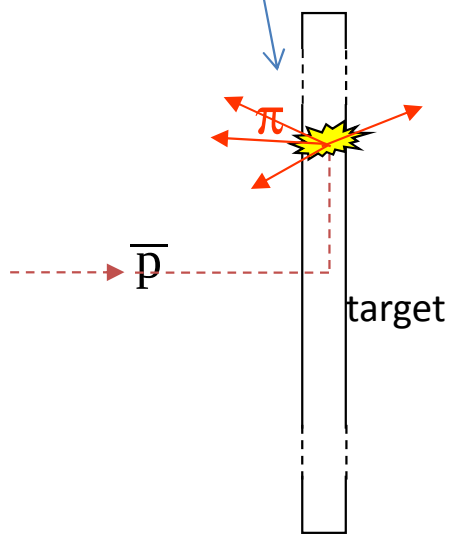

Beam intensity measurement

Cherenkov detector → relative measurement of the pbar beam intensity

Cherenkov calibration by measuring the Coulomb-scattered antiprotons from the C+Pt target on a 2° ring → absolute pbar beam intensity

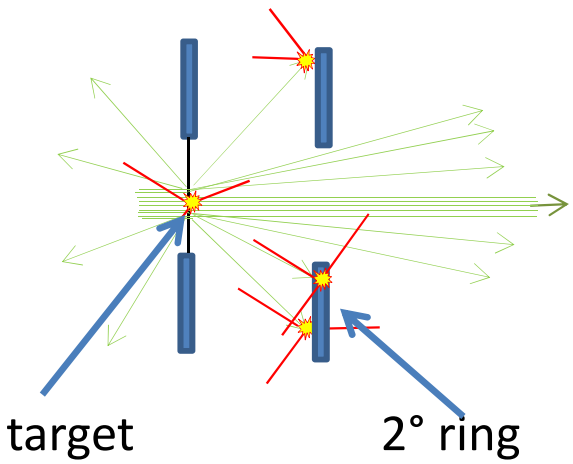

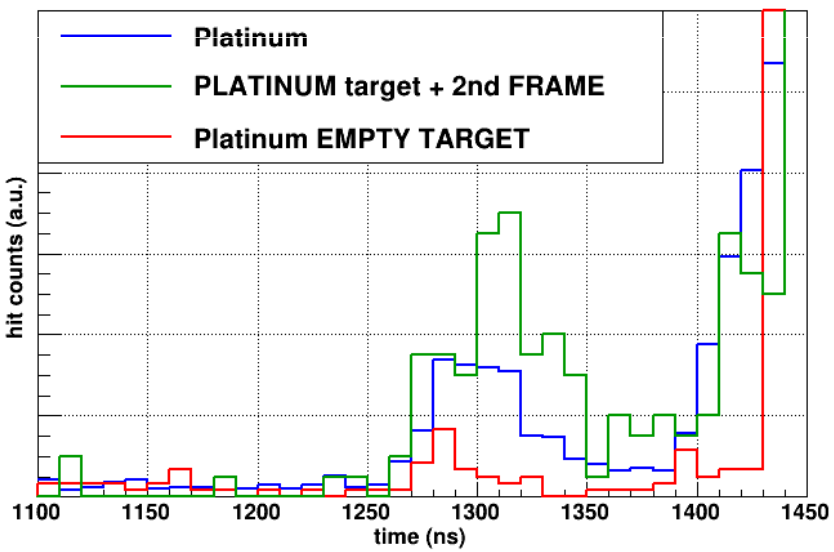

N.B. $$\sigma_{ann}(\bar{p}A) \div \frac{N_{events}}{N_{beam}}$$ same detector (DET1 &/or DET2)

➔ σ_{ann} is independent from detector efficiency

Carbon target

Problems with bare-C target data

	Normalized prongs/bunch (DET1)
C	7.23 ± 0.29 ← Too many in respect to the others
C+Pd	1.94 ± 0.15
C+Pt	1.70 ± 0.21

- The carbon films had similar thicknesses (even if bare-C not measured)
- same results in different days and with different detectors (DET1 and DET2)

Why ?

- Large beam halo on the bare-C frame is very unlikely (checked during runs)
- usual dust seems to not explain the effect
- bare-C target was contaminated by some material during its installation?

Upper limits on
pbar-nucleus annihilation cross-sections @125 keV

In 2012 data for 3 targets:

C

(C+Pd)

(C+Pt)

…but bare-C target was unreliable

Can we extract annih. cross-sections only from (C+Pd) and (C+Pt) data?

Annihilation cross-section (σ)

$$\begin{cases} N_{events}^{Pt+C} = N_{pbar}\left(\sigma_{Pt} n_{Pt} + \sigma_C n_C\right) & \text{for (Pt+C) target} \\ N_{events}^{Pd+C} = N_{pbar}\left(\sigma_{Pd} n_{Pd} + \sigma_C n_C^{'}\right) & \text{for (Pd+C) target} \end{cases}$$

2 equations and 3 variables $\left(\sigma_C, \sigma_{Pd}, \sigma_{Pt}\right)$

It is possible to measure:

- relative σ: $\frac{\sigma_{Pd}}{\sigma_C}, \frac{\sigma_{Pt}}{\sigma_C}, \frac{\sigma_{Pt}}{\sigma_{Pd}}$

- (lower & upper) limits for $\sigma_C, \sigma_{Pd}, \sigma_{Pt}$

Legenda:

$N_{events}^{Pt+C}\left(N_{events}^{Pd+C}\right) =$ # of in-flight annihilations for Pt+C (Pd+C) target

$N_{pbar} =$ # of injected pbars

$n_X =$ Surface number density for X element ← RBS measurement @ Legnaro (Italy)

(lower & upper) limits for σ_C, σ_{Pd}, σ_{Pt}

From:

$$\begin{cases} \sigma_{Pt} = -\dfrac{n_C}{n_{Pt}}\sigma_C + \dfrac{N_{events}^{Pt+C}}{N_{pbar}\, n_{Pt}} \\ \sigma_{Pd} = -\dfrac{n_C^{'}}{n_{Pd}}\sigma_C + \dfrac{N_{events}^{Pd+C}}{N_{pbar}\, n_{Pd}} \end{cases}$$

with the conditions $\sigma_C \geq 0 \;\; \sigma_{Pd} \geq 0 \;\; \sigma_{Pt} \geq 0$

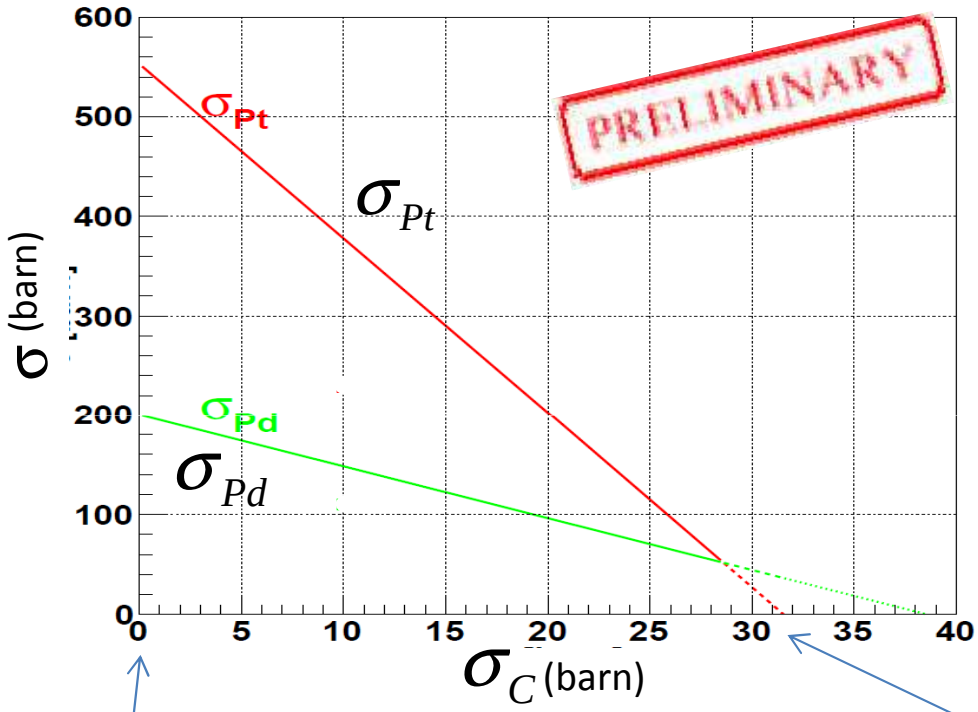

Contribution to in-flight annihilations from C-foil is negligible

Mostly of in-flight annihilations are due to C-foil

more stringent (lower & upper) limits for σ_C, σ_{Pd}, σ_{Pt}

In addition if we assume: $\sigma_{Pt} \geq \sigma_{Pd} \geq \sigma_C$ we can limit the ranges

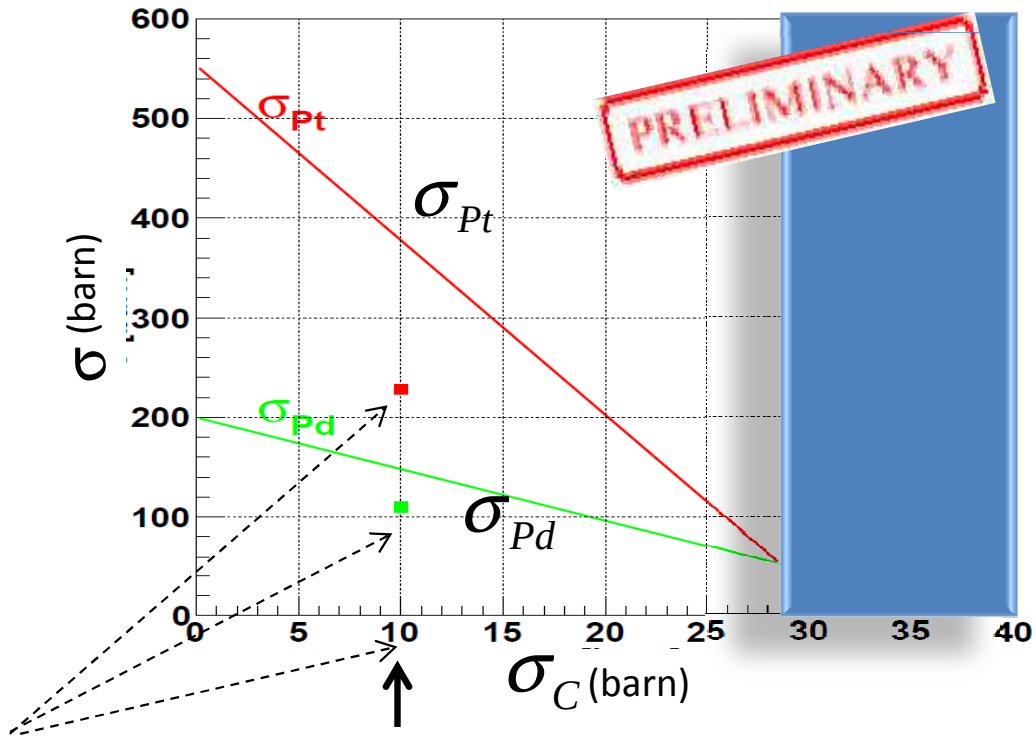

σ_{Pt} uncertanty ~ 300 barn

σ_{Pd} uncertanty ~ 100 barn

Main contribution from 2° ring position uncertanty (+- 2mm)

model
(Black-disk + Coulomb focusing)

Model and experiment in agreement

@125 keV

36 < σ_{Pt} < 553 (± 300) barn

36 < σ_{Pd} < 200 (± 94) barn

0.5 < σ_{C} < 28 barn

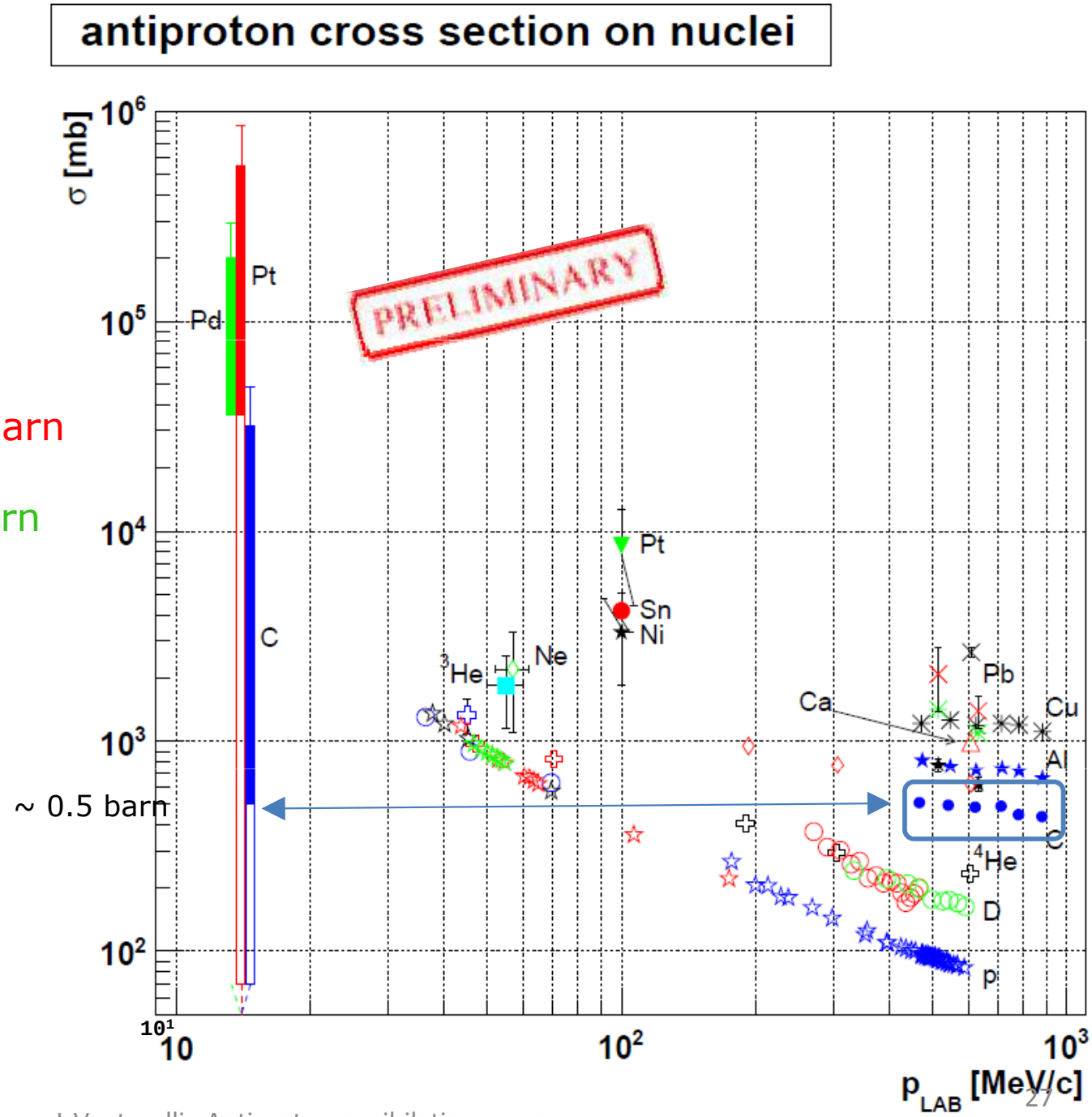

Conclusions

- Antiproton-nucleus σ_{ann} measurement is feasible at 100 keV with ultra-thin solid targets
  - clear time separation between target signal and bkg annihilations on the vessel
  - acceptable bck from π-μ-e decay and pbar beam halo

- Upper (and lower) limits of the antiproton σ_{ann} on C, Pd and Pt at 125 keV have been measured for the first time
The results are consistent with the expected values from black-disk model with Coulomb focusing

- Antiproton absolute σ_{ann} can be measured in the 100 keV region for different targets at AD and at the future ELENA decelerator

- during the next 2 years (before ELENA) both pbar annihilation and elastic σ could be measured at 5 MeV in connection with the "antineutron puzzle".