Updates on strip modules

Tommaso Quagli
II. Physikalisches Institut, JLU Gießen

JUSTUS-LIEBIG-UNIVERSITÄT GIESSEN

PANDA Collaboration Meeting
GSI, December 10th, 2013

II. Physikalisches Institut

Layout considerations

- Front-end size & chip positioning on the staves
  → for details, see the talk of André Goerres

- Chip positioning on the staves

- Review of detector numbers and services

Front-end size

PASTA layout:

die size: 4.24 x 5÷6 mm

64 channels

Back pads: ?? pitch
Front-end pads: 60 µm pitch
Lateral: pad-free

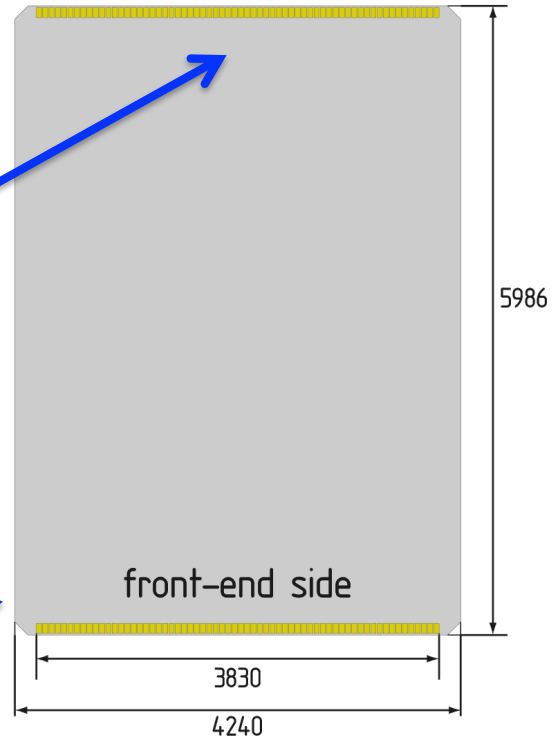

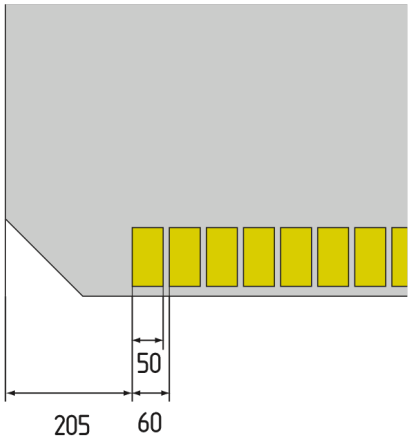

For details, see the talk of André Goerres

Chip arrangement on stave - BL3 and BL4

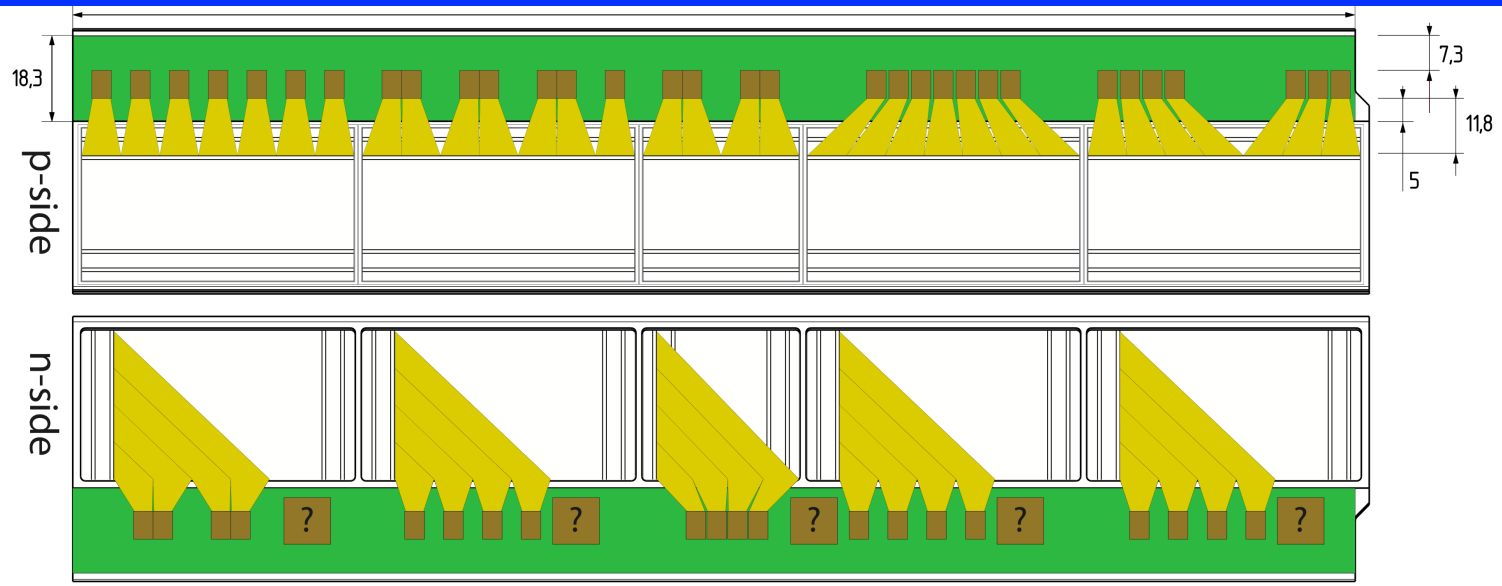

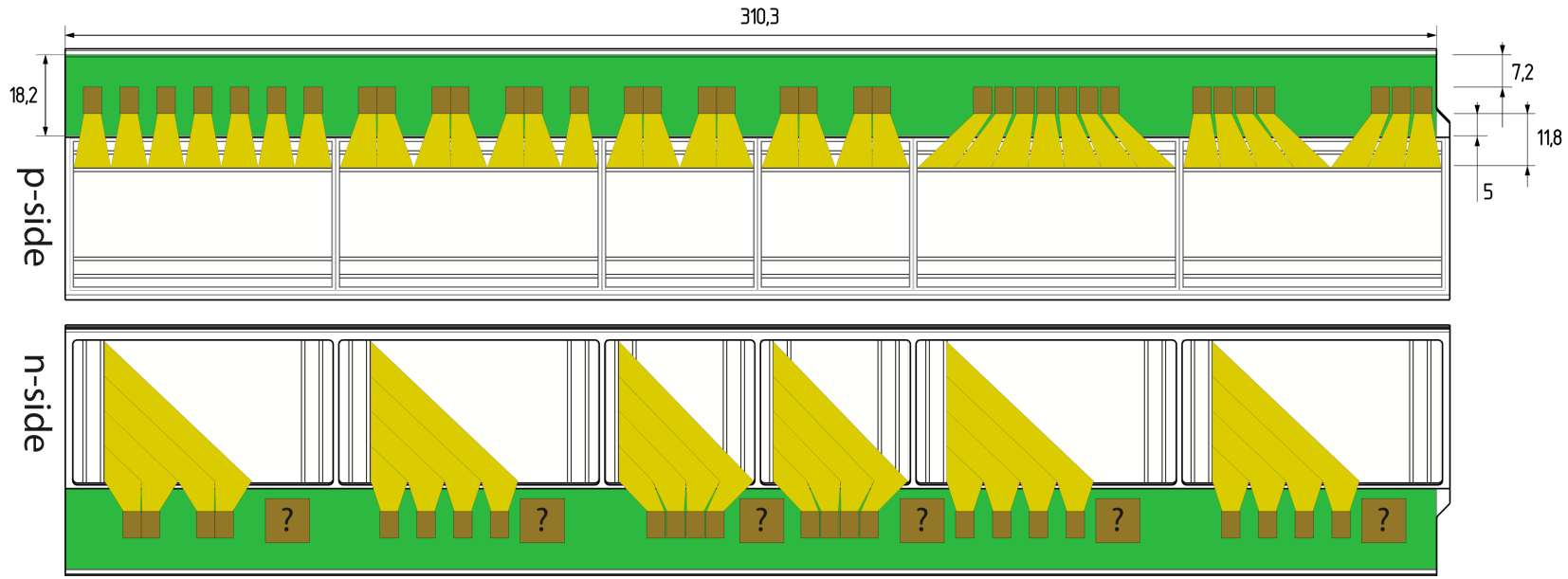

Summary – some numbers

Number of supermodules:

Barrels:

- 16 (A-type stave)
- 4 (B-type stave)
- 22 (C-type stave)
- 4 (D-type stave)

Disks:

- 24 supermodules

TOTAL: 46

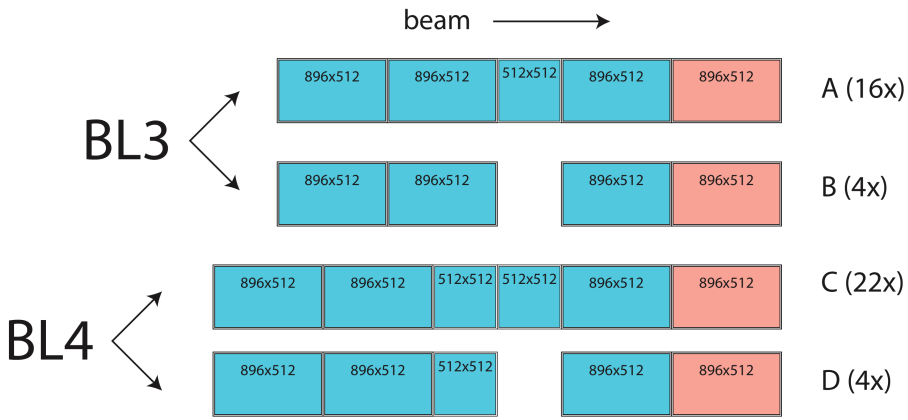

Number of sensors:

Barrels:

- 184 (rectangular), each requiring 11 FEs
- 64 (squared), each requiring 8 Fes

Disks:

- 48 (trapezoidal), each requiring 12 FEs

TOTAL: 296

Number of front-ends:

- 2536 (barrel)
- 576 (disks)

TOTAL: 3112

Number of module controllers:

One per sensor →

TOTAL: 296

Summary – some numbers (2)

Number of DC-DC converters:

Five per sensor:

- n-side FEs (analog and digital)
- p-side FEs (analog and digital)
- MDC

TOTAL: 1480

Number of GBT boards:

- each GBT board has 8 (?) e-links

→ 390 / 8 = 37

TOTAL: 49

Number of e-links:

Barrels:

- each "red" sensor: 2 e-links

  → 46 x 2 = 92 e-links
- each "blue" sensor: 1 e-link

  →202 e-links

Disks:

- each sensor: 2 e-links

  → 48 x 2 = 96 e-links

TOTAL: 390

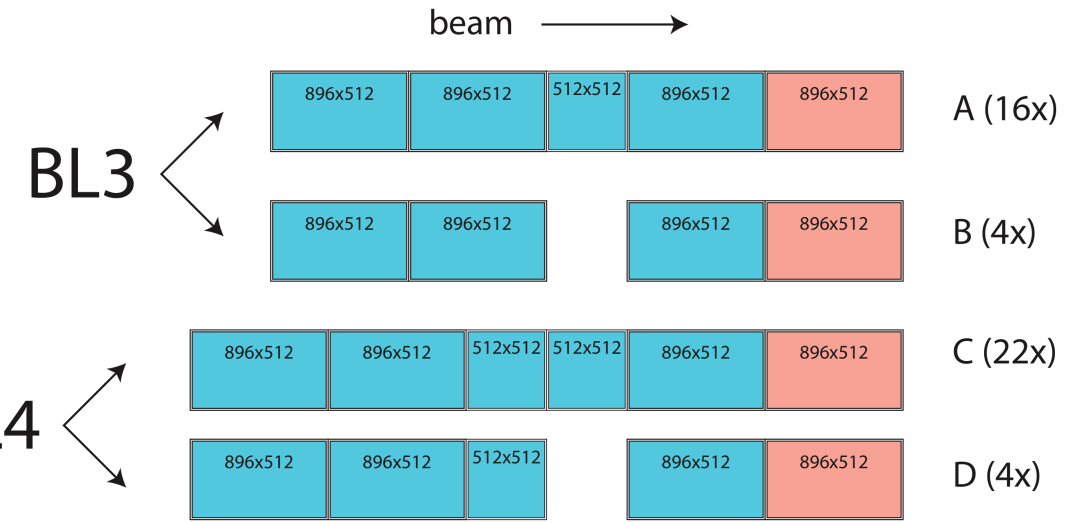

Cable routing – summary

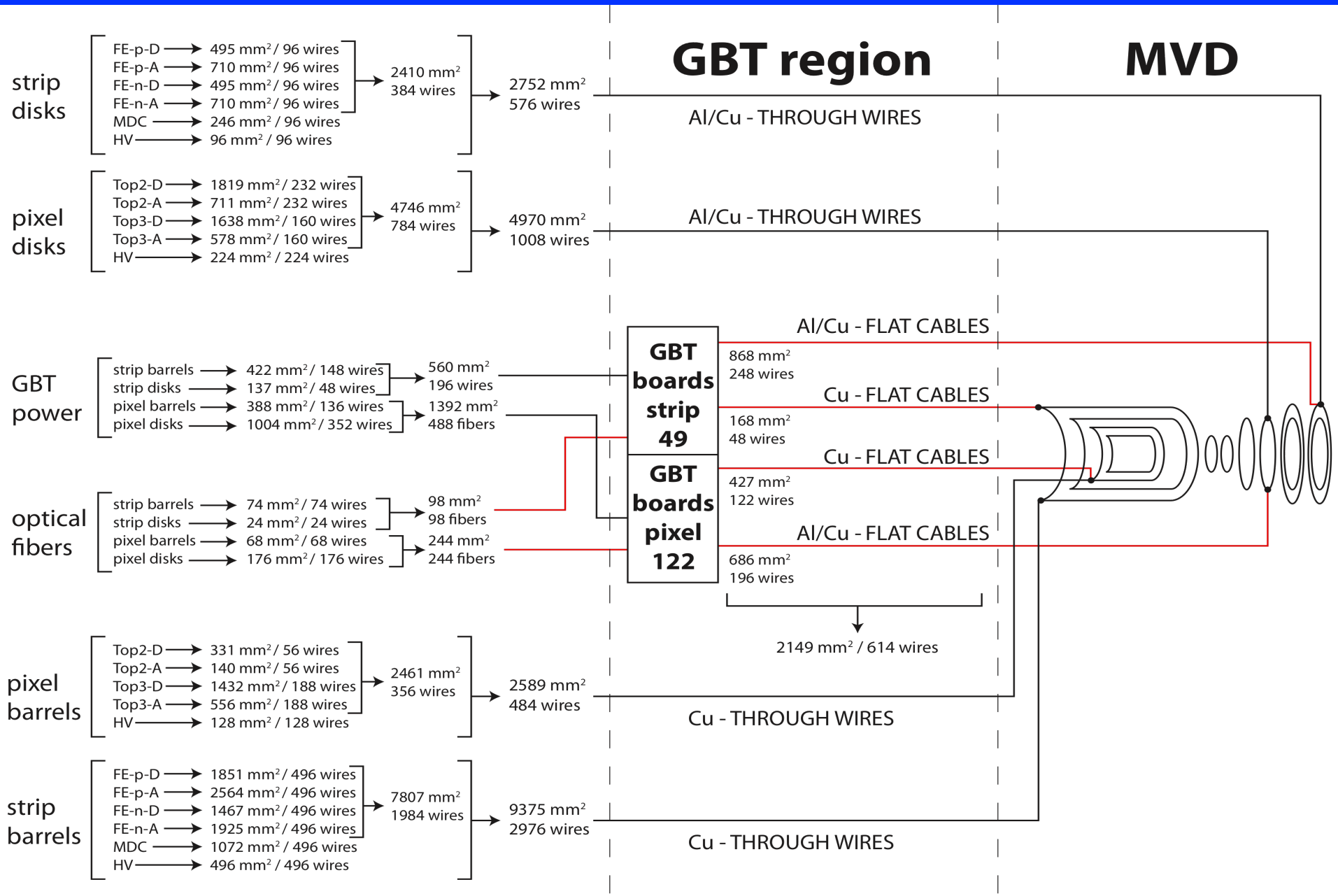

Cable routing – strips

- Cables included: FE (dig. p, ana. p, dig. n, ana. n) + MDC + HV
- Cable diameter between 0.5 mm and 1.5 mm
- Allowed voltage drop: 100 mV in 4 m (>distance MVD-DC/DC)
- Total occupancy:
  - Barrels: **2976 wires, 9375 mm^2**
  - Disks: **576 wires, 2752 mm^2**

The cross section must be reduced within the stave

→ additional allowed voltage drop of 100 mV along the stave

Idea: put the cables inside the carbon foam structure
(see talk of Vincenzo Fracassi)

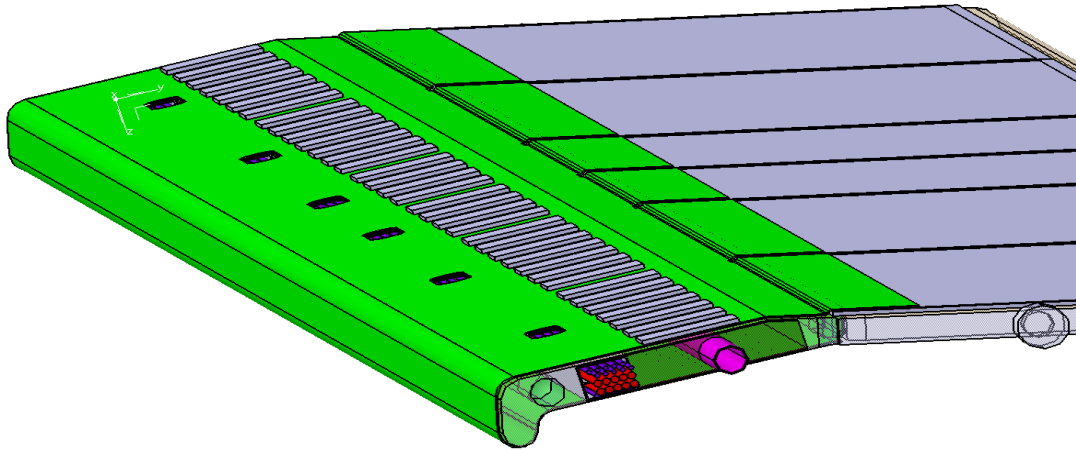

Cable routing – strips

- 100 mV allowed voltage drop from left cable-in to the cutouts: different diameters (0.15 ÷ 0.45 mm) are used
- 3 pairs from each "N" hole and 2 pairs from each "P" hole
- 30 cable pairs in total for the largest staves (no HV included)

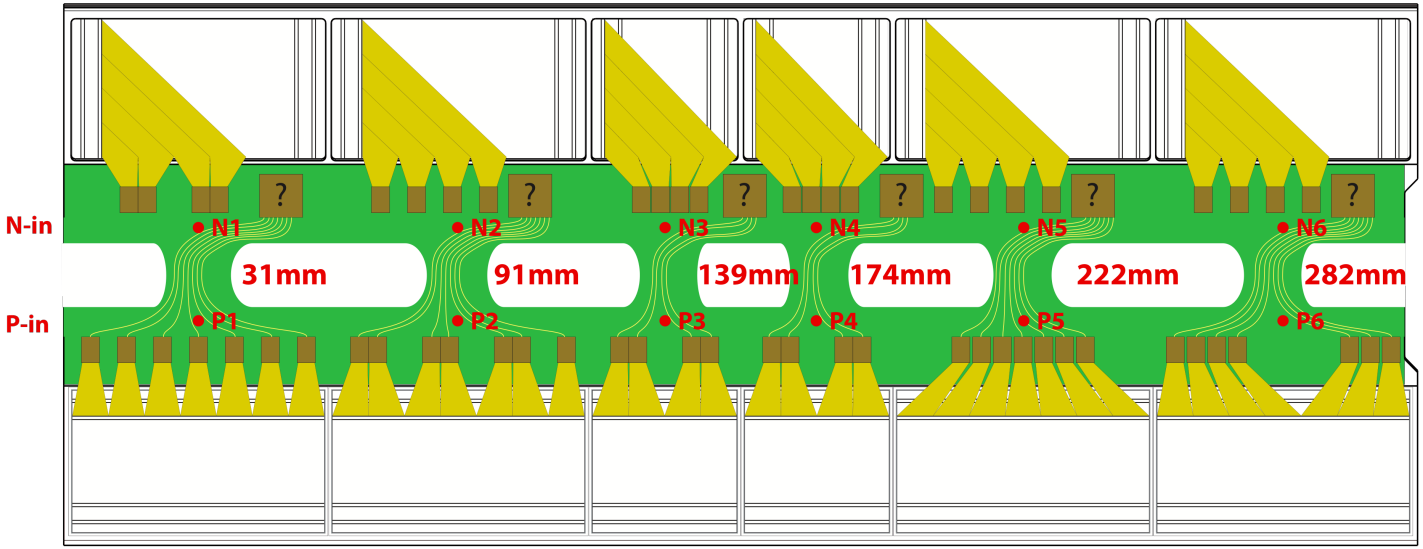

Everything ok? Almost…

- How to insert the cables in the stave? → see Vincenzo's talk
- Cross section difference: incoming cross section is 50 mm^2, total cross section on stave is 4 mm^2: the transition takes space!
- A lot of power is dissipated in the cables

Power cables routing

Power consumption per supermodule:

Barrels:

- A-type: 13.3 W
- B-type: 11.3 W
- C-type: 15.4 W
- D-type: 13.3 W

Disks:

- 6.1 W per supermodule

TOTAL: ~800 W

N.B. 296 MDCs not included!!!

Working hypothesis:
200 mA @ 2.5 V = 625 mW per MDC
i.e. 184 W in addition

Dissipation on cables (LV only)

Barrels: LV cables along (inside?) the stave:

- max. total current per stave: 27 A
- dissipation 4-5 W per stave
- cross section: 3÷4 mm^2 per stave

Disks:

- max. total current per supermodule: 10 A
- dissipation 2 W per supermodule
- cross section: 4 mm^2 per supermodule

Total 240 W (192 W BL, 47 W DK) dissipated on cables within the MVD area (strip only, excl. HV)!

Recent hardware developments

- Status of R&D: sensor and module tests in Gießen
- Plan for future tests
- Status of lab equipment in Gießen

Sensor tests

- CiS sensors with punch-through biasing tested extensively.
- New batch (poly-Si biasing) arrived, not yet tested.
- Rigid module (Flex-PA and squared sensor) tested at SPS, CERN (September 2012) and in the lab.
- Flex module tested in the lab.

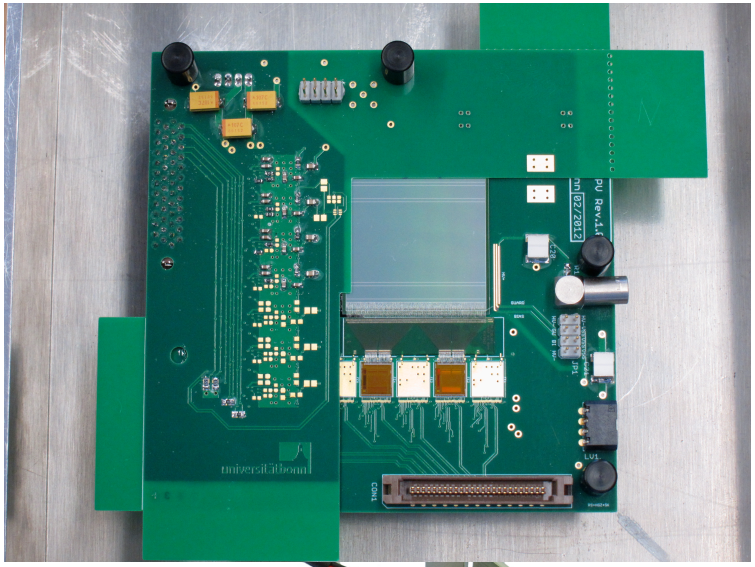

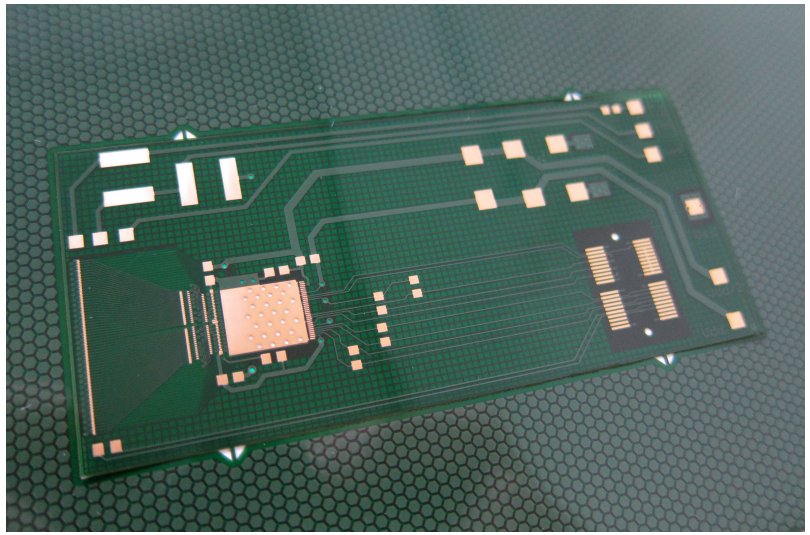

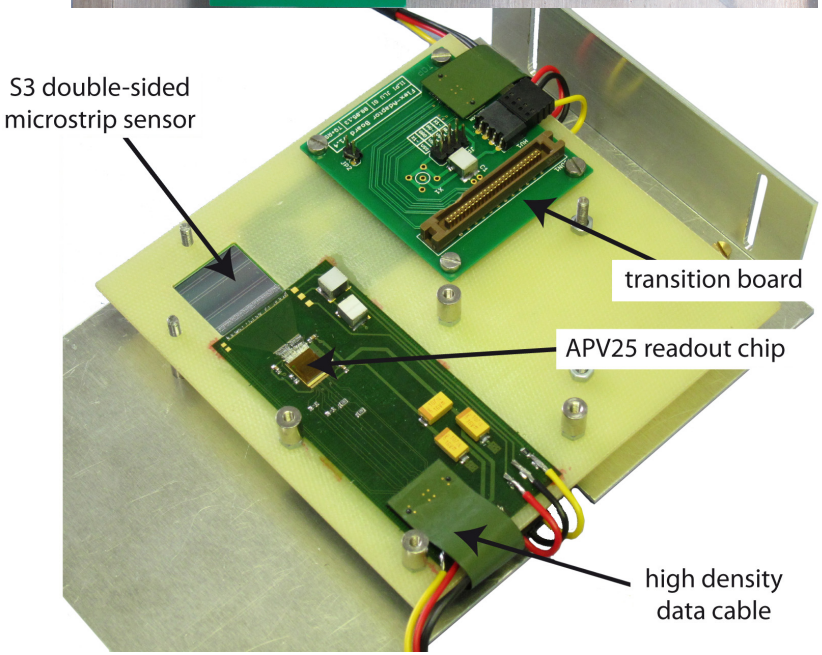

Flex sensor module

- Two flex boards with 1 APV each read out both sides of a 2x2 cm^2 sensor
- The assembly features two transition boards with larger connectors
- Problems in the APV bonding repaired during the summer
- Module successfully tested in the lab with ^{90}Sr source!

- Next steps: test of the module in beam and design of a larger, multi-FE flex PCB

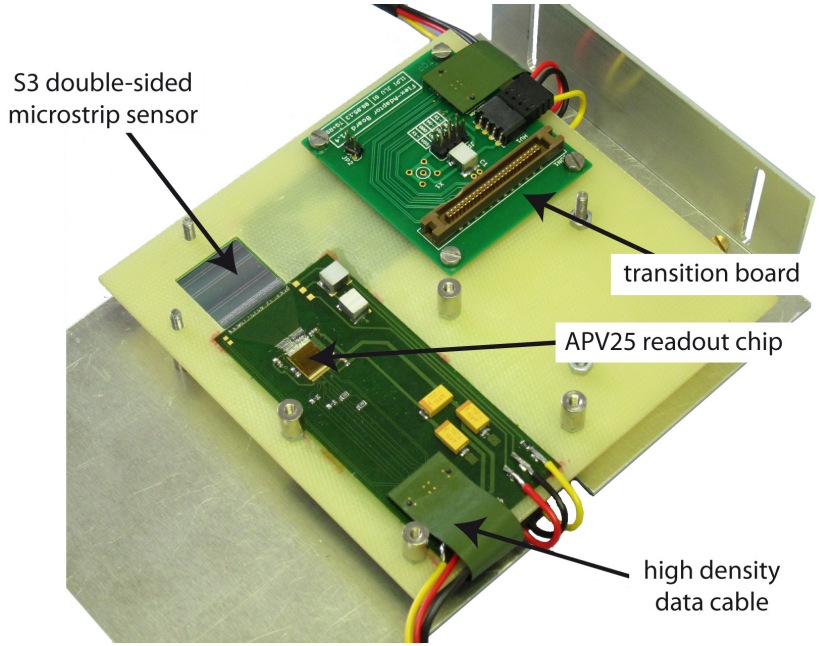

Next steps

- **Jülich beam test, December 16th-20th:**
  - Test will be mostly devoted to strips
  - 4 nights of p beam
  - Devices to be tested (Gießen / Bonn group):
    - Rigid PANDA squared module
    - Flex module
    - BGOOD module
- **Test of the new batch of sensors**
- **Sensor test bench with IR laser**

Lab equipment in Gießen

Lab equipment in Gießen

- Cascade Microtech Semi-automatic Probe Station
- Delvotec Semi-automatic Wire Bonder
- Various equipment for detector modules assembly

Lab equipment in Gießen

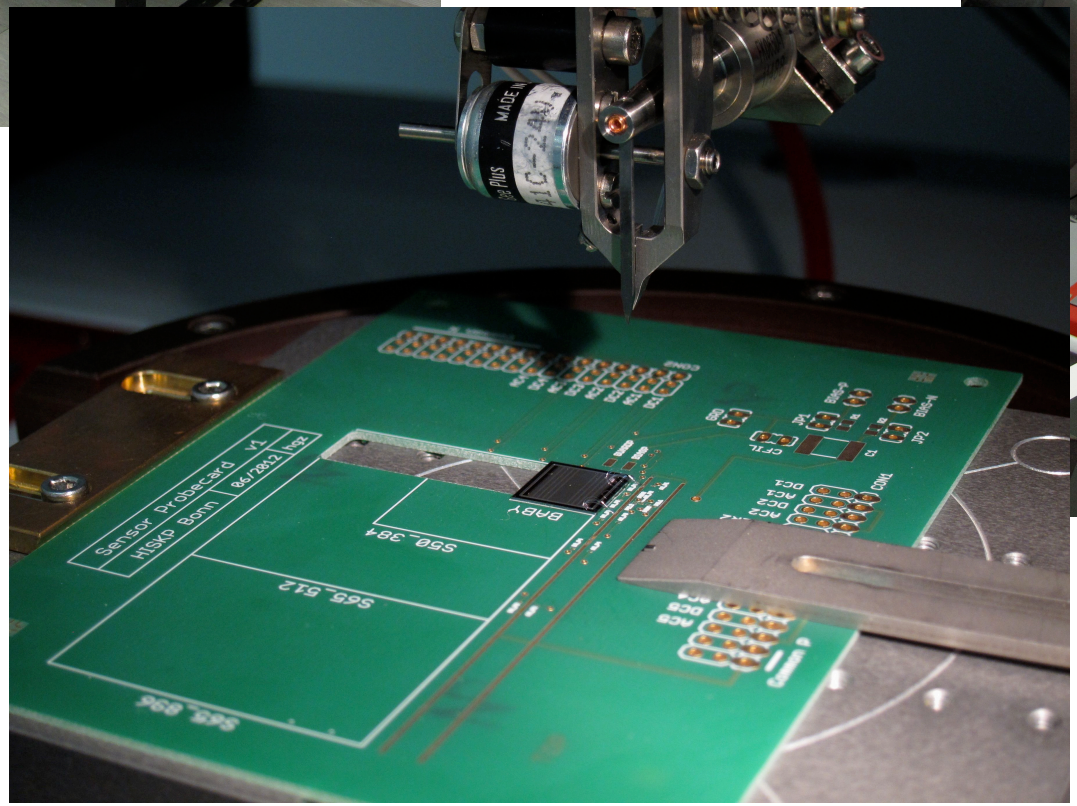

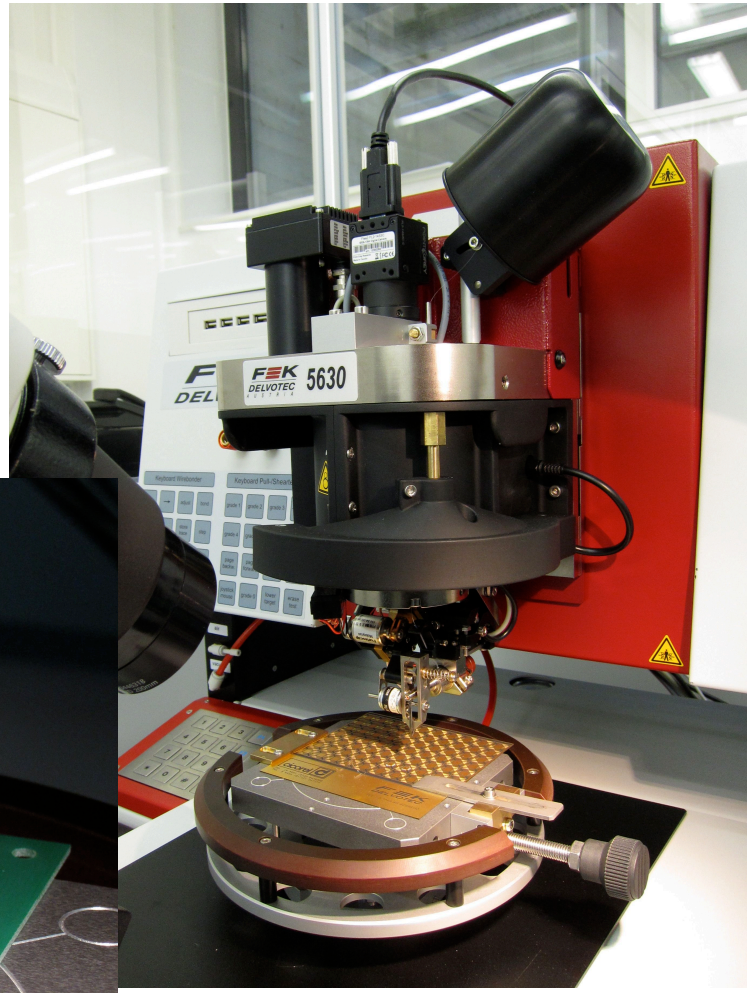

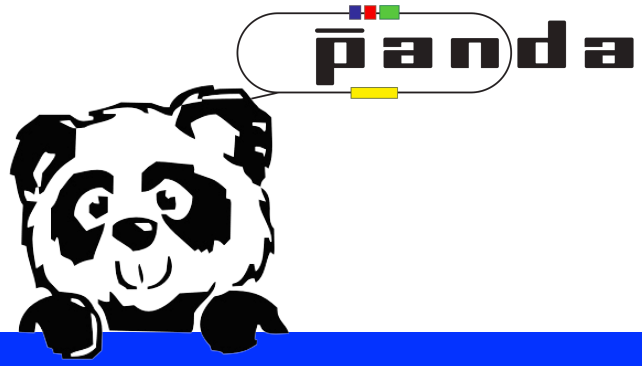

Thank you for your attention!