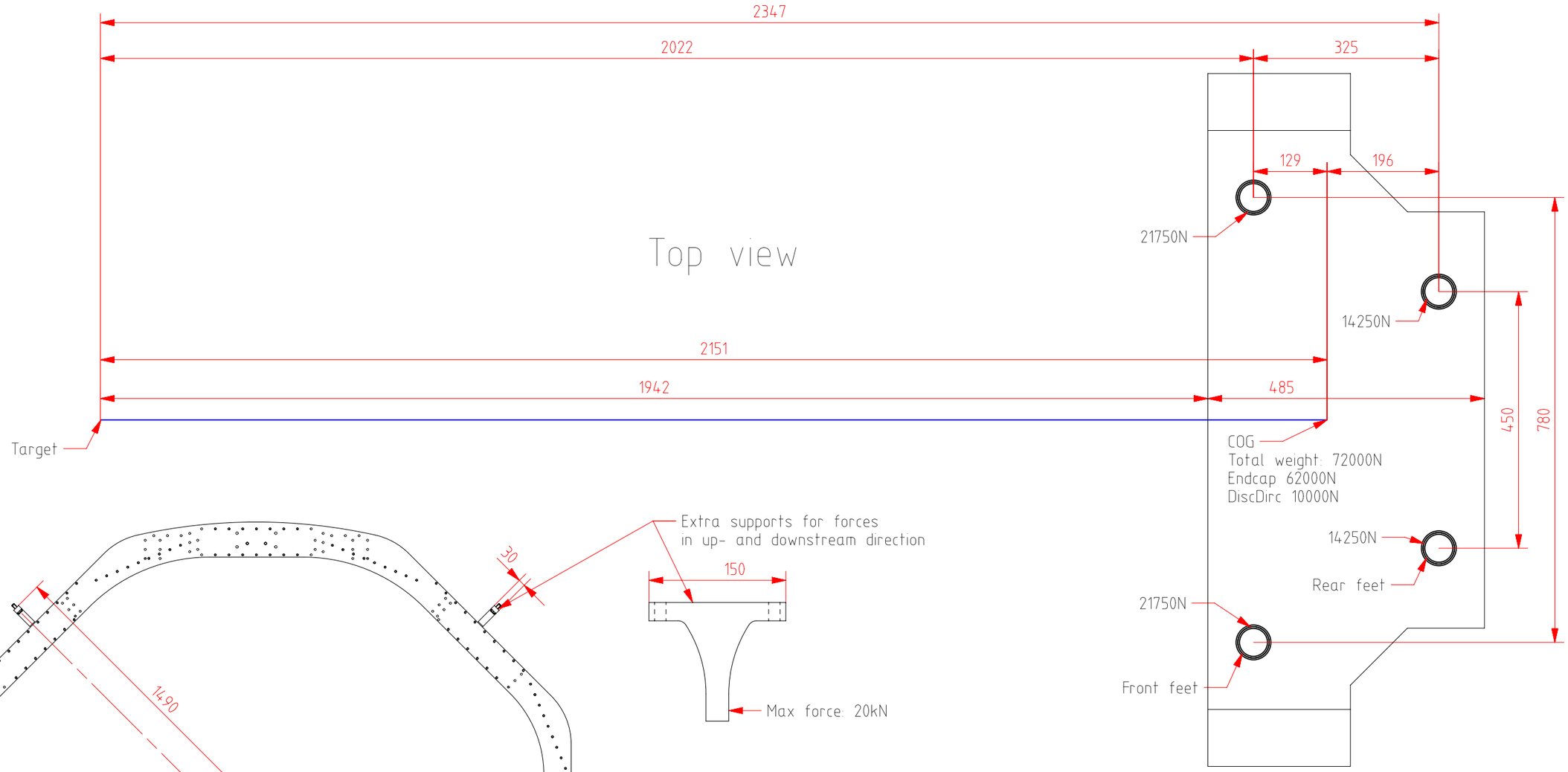

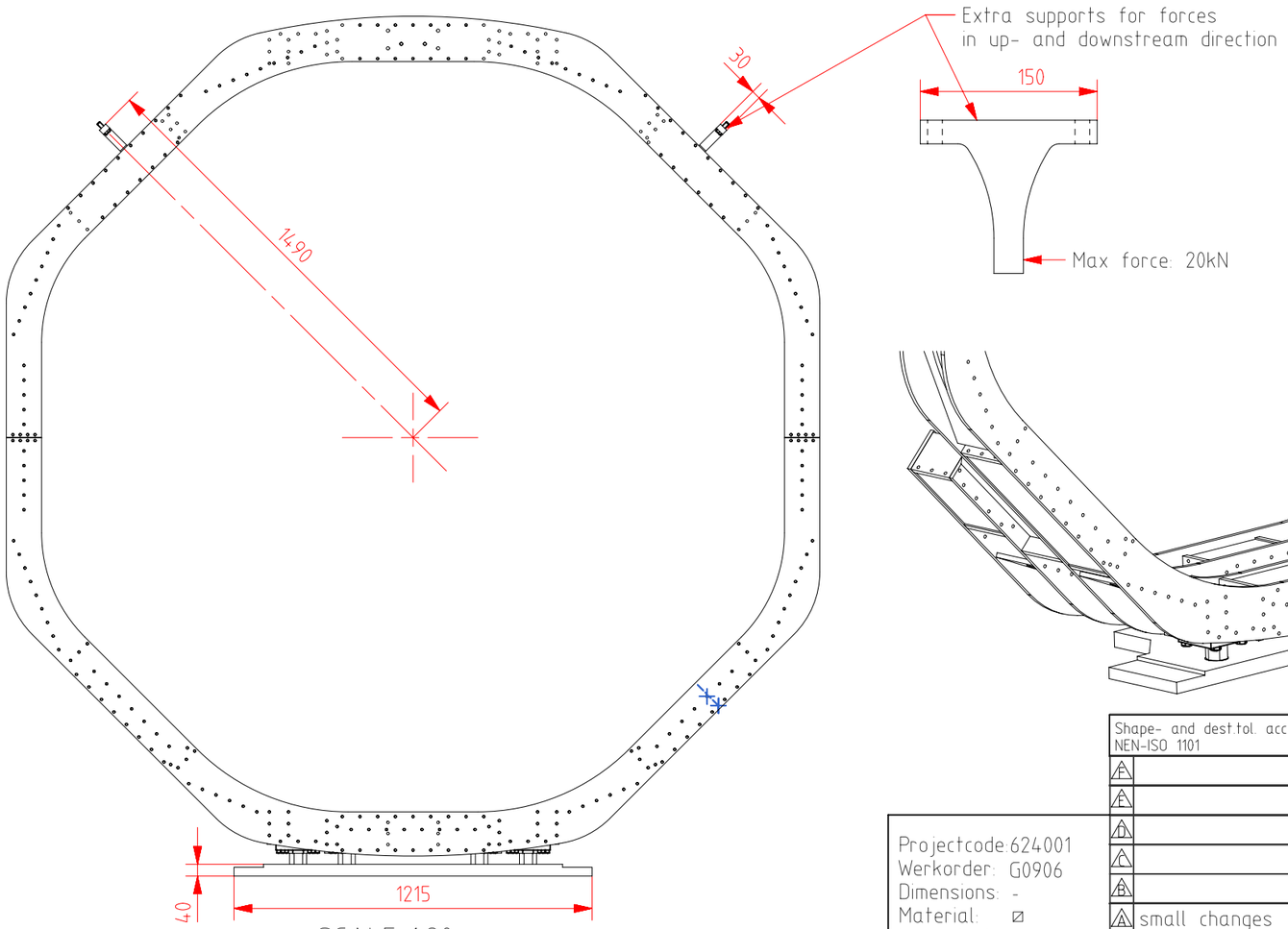

SCALE 1:20

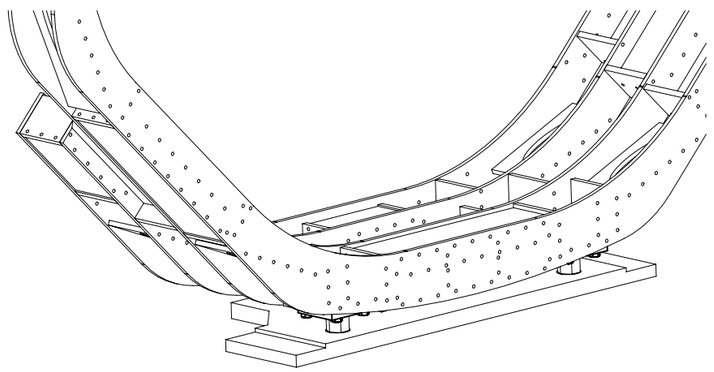

The weight of the DiscDirc is a rough estimation.
The COG of the DiscDirc is ussumed to be right above the front supports.

Projectcode: 624001
Werkorder: G0906
Dimensions: -
Material: ⌀
Mass [kg]:

A	small changes	05-02-2013	
	Revision	Date	

Shape- and dest.tol. acc. NEN-ISO 1101
Dim. tol. acc. NEN-ISO 406
General Tolerances NEN-ISO 2768-1m / 2768-2K
Roughness acc. NPR 3634
mm

	Date:	Name:
Drawn	jan 2013	M.Lindemulder
Checked	–	–

Kernfysisch Versneller Instituut
Zernikelaan 25 9747AA Groningen
+31 (0)50 363 3549 / www.kvi.nl

Project: FW Endcap
Group: GSI PANDA
Name: Support positions and forces
Drawing number: 3;0906;1000_forces_positions
Scale 1:8
A3
Sheet 1/1

NEN ISO 2768-2K Geometrical tolerances	Nominal dims. mm	Straightness & Flatness —	t/m10	10-30	30-100	100-300	300-1000	1000-3000	Squareness ⊥	t/m100	100-300	300-1000	1000-3000	Symmetry ⌯	t/m100	100-300	300-1000	1000-3000	Circular Stroke ↗	
	Tolerance mm	▱	0,05	0,1	0,2	0,4	0,6	0,8		0,4	0,6	0,8	1		0,6	0,8	1		0,2	

NEN-ISO 2768-1m Linear dimensions	0,5-3	3-6	6-30	30-120	120-400	400-1000	1000-2000	2000-4000	[mm]
Nominal dims.	0,5-3	3-6	6-30	30-120	120-400	400-1000	1000-2000	2000-4000	[mm]
Tolerance	±0,1	±0,1	±0,2	±0,3	±0,5	±0,8	±1,2	±2	

Corners	0-10	10-50	50-120	120-400	400-
l-min cornerside tolerance	±1°	±0°30'	±0°20'	±0°10'	±0°5'

Broken edges	0,5-3	3-6	6-	[mm]
	±0,2	±0,5	±1	[mm]