FAIRNESS 2013

Berlin, September 16-21 2013

The $\psi(4040)$ at the future $\overline{\text{P}}$ANDA experiment

L. Zotti[1], A. Filippi[2], S. Marcello[1], S. Spataro[1]

1) Università degli Studi di Torino & INFN Torino
2) INFN Torino

Outlines

- $\overline{\text{P}}$ANDA Physics and Experimental Setup
- Charmonium System
- $\psi(4040)$
  - Motivations
  - Cross Section
  - Study of Momentum Distributions
  - Analysis Strategy
  - Results
  - Preliminary Estimation S/B
- Conclusions

$\overline{\text{P}}$ANDA Physics and Experimental Setup

$\overline{\text{P}}$ANDA is one of the experiments of the new FAIR facility at GSI. Antiproton beam will be available with a beam momentum from 1.5 up to 15 GeV/c in HESR.

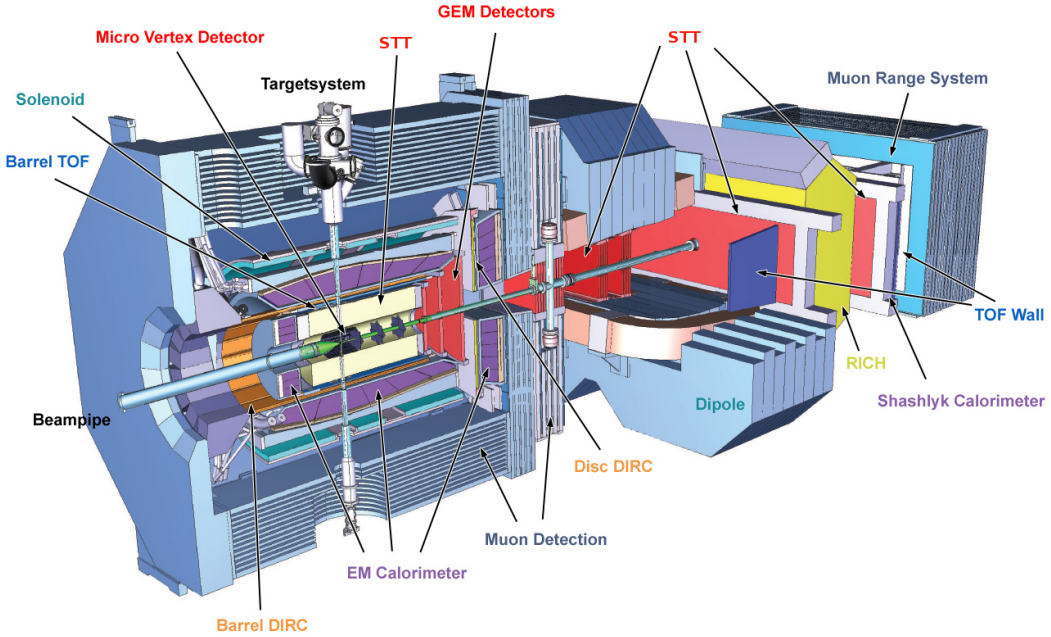

see talk of E. Fioravanti
"Experimental overview of $\overline{\text{P}}$ANDA" (Friday 20th)

Physics Goals

- Hadron spectroscopy
- Gluonic excitations
- Charm in nuclei
- Hypernuclei
- CP violation

Charmonia and Charmonium-like system

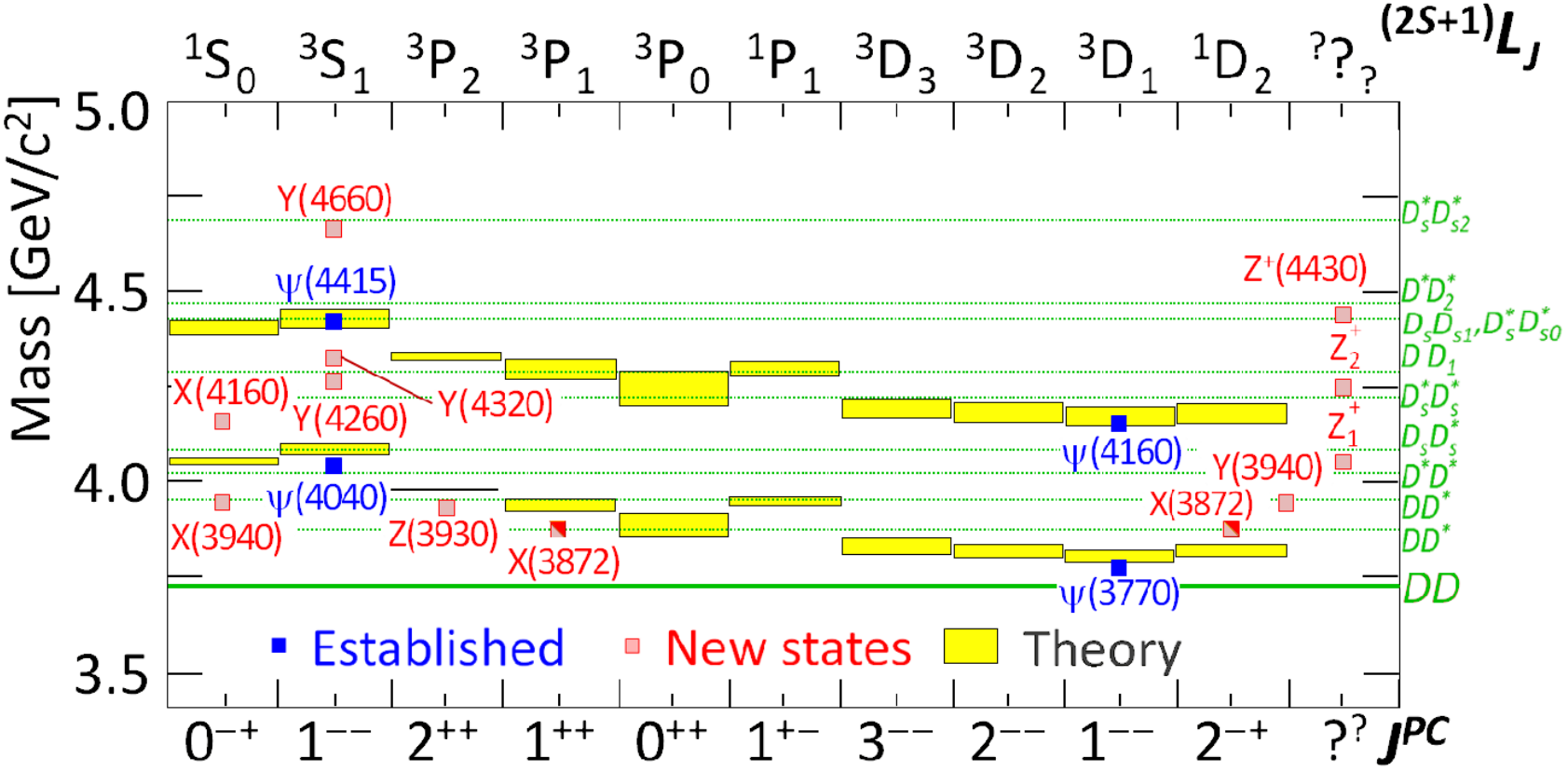

$\psi(4040)$

$\psi(4040)$

$I^G(J^{PC}) = 0^-(1^{--})$

$\psi(4040)$ MASS

VALUE (MeV)	DOCUMENT ID		TECN	COMMENT
4039 ± 1 OUR ESTIMATE				
4039.6 ± 4.3	[1] ABLIKIM	08D	BES2	$e^+e^- \to$ hadrons
• • • We do not use the following data for averages, fits, limits, etc. • • •				
4034 ± 6	[2] MO	10	RVUE	$e^+e^- \to$ hadrons
4037 ± 2	[3] SETH	05A	RVUE	$e^+e^- \to$ hadrons
4040 ± 1	[4] SETH	05A	RVUE	$e^+e^- \to$ hadrons
4040 ±10	BRANDELIK	78C	DASP	e^+e^-

$\psi(4040)$ WIDTH

VALUE (MeV)	DOCUMENT ID		TECN	COMMENT
80 ±10 OUR ESTIMATE				
84.5 ±12.3	[5] ABLIKIM	08D	BES2	$e^+e^- \to$ hadrons
• • • We do not use the following data for averages, fits, limits, etc. • • •				
87 ±11	[6] MO	10	RVUE	$e^+e^- \to$ hadrons
85 ±10	[7] SETH	05A	RVUE	$e^+e^- \to$ hadrons
89 ± 6	[8] SETH	05A	RVUE	$e^+e^- \to$ hadrons
52 ±10	BRANDELIK	78C	DASP	e^+e^-

PDG-2012

$\psi(4040)$ DECAY MODES

	Mode	Fraction (Γ_i/Γ)		Confidence level
Γ_1	e^+e^-	$(1.07\pm0.16)\times10^{-5}$		
Γ_2	$D\overline{D}$	seen		
Γ_3	$D^0\overline{D}^0$	seen		
Γ_4	D^+D^-	seen		
Γ_5	$D^*\overline{D}+$ c.c.	seen		
Γ_6	$D^*(2007)^0\overline{D}^0+$ c.c.	seen		
Γ_7	$D^*(2010)^+D^-+$ c.c.	seen		
Γ_8	$D^*\overline{D}^*$	seen		
Γ_9	$D^*(2007)^0\overline{D}^*(2007)^0$	seen		
Γ_{10}	$D^*(2010)^+D^*(2010)^-$	seen		
Γ_{11}	$D\overline{D}\pi$ (excl. $D^*\overline{D}$)			
Γ_{12}	$D^0D^-\pi^+$ +c.c. (excl. $D^*(2007)^0\overline{D}^0$ +c.c., $D^*(2010)^+D^-$ +c.c.)	not seen		
Γ_{13}	$D\overline{D}^*\pi$ (excl. $D^*\overline{D}^*$)	not seen		
Γ_{14}	$D^0\overline{D}^{*-}\pi^+$ +c.c. (excl. $D^*(2010)^+D^*(2010)^-$)	seen		
Γ_{15}	$D_s^+D_s^-$	seen		
Γ_{16}	$J/\psi(1S)$ hadrons			
Γ_{17}	$J/\psi\pi^+\pi^-$	<4	$\times10^{-3}$	90%
Γ_{18}	$J/\psi\pi^0\pi^0$	<2	$\times10^{-3}$	90%
Γ_{19}	$J/\psi\eta$	<7	$\times10^{-3}$	90%
Γ_{20}	$J/\psi\pi^0$	<2	$\times10^{-3}$	90%
Γ_{21}	$J/\psi\pi^+\pi^-\pi^0$	<2	$\times10^{-3}$	90%
Γ_{22}	$\chi_{c1}\gamma$	<1.1	%	90%
Γ_{23}	$\chi_{c2}\gamma$	<1.7	%	90%
Γ_{24}	$\chi_{c1}\pi^+\pi^-\pi^0$	<1.1	%	90%
Γ_{25}	$\chi_{c2}\pi^+\pi^-\pi^0$	<3.2	%	90%
Γ_{26}	$h_c(1P)\pi^+\pi^-$	<3	$\times10^{-3}$	90%
Γ_{27}	$\phi\pi^+\pi^-$	<3	$\times10^{-3}$	90%
Γ_{28}	$\mu^+\mu^-$			

Cross Section

$p\overline{p} \rightarrow \psi(4040) \rightarrow \mathrm{D}^{*+}\mathrm{D}^{*-}$ @ $p_{\overline{p}}$=7.71 GeV/c
$D^{*+/-} \rightarrow \mathrm{D}^0\pi^{+/-}$ BR: 67.7 %
$D^0 \rightarrow K^-\pi^+$ BR: 3.88 %

$$\sigma_R(s) = \frac{4\pi\hbar^2c^2}{s - 2m_p^2c^4}\frac{B_{in}B_{out}}{1 + (2(\sqrt{s} - M_Rc^2)/\Gamma_R)^2}$$

- Bin: BR $\psi(4040) \rightarrow p\overline{p}$
- Bout: BR $\psi(4040) \rightarrow D^{*+}D^{*-}$
- M_r=4039 $\pm$ 1 MeV
- Γ_r=80 $\pm$10MeV

Cross Section

- Bin: BR $\psi(4040) \rightarrow p\overline{p}$ has to be extrapolated:

$$B_{in} = B[J/\psi \rightarrow p\overline{p}]\frac{\Gamma_{J/\psi}}{\Gamma_{\psi(4040)}} = 2.17{\cdot}10^{-3}\frac{92.2keV}{80MeV} = 2.5{\cdot}10^{-6}$$

- Bout: BR $[\psi(4040) \rightarrow D^{*+}D^{*-}]$ = 33% [1]

$$\sigma = 0.912nb$$

$$R = \frac{\sigma(p\overline{p} \rightarrow D^{*+}D^{*-})}{\sigma(p\overline{p} \rightarrow X)} = \frac{0.912 \cdot (0.677)^2 \cdot (0.0388)^2}{60mb}$$

$$R = 1.05 \cdot 10^{-11}$$

[1] G. Goldhaber and J.E. Wiss, Phys. Lett., 69B(4), August 1977.

Cross Section

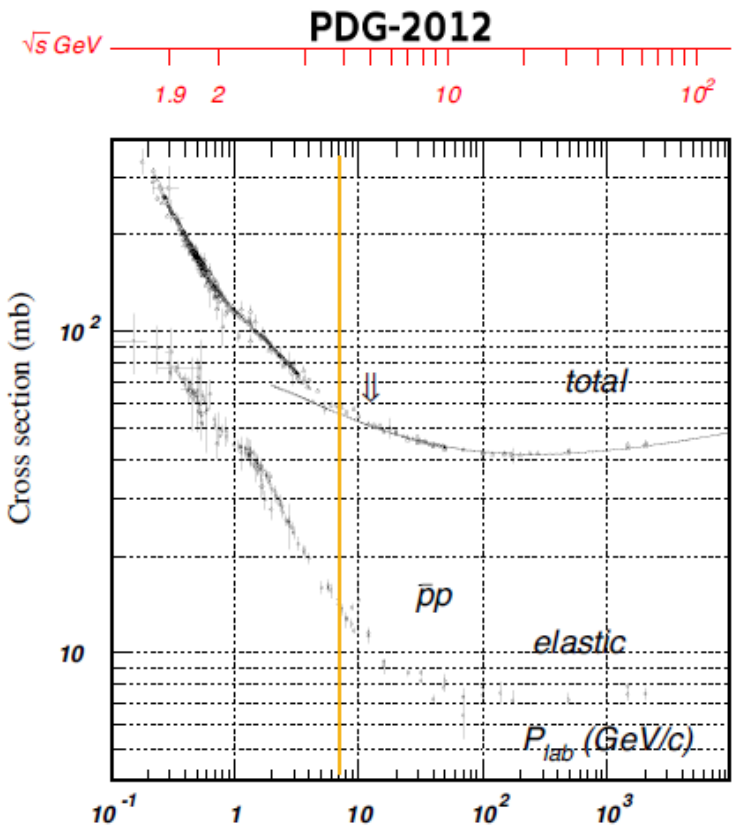

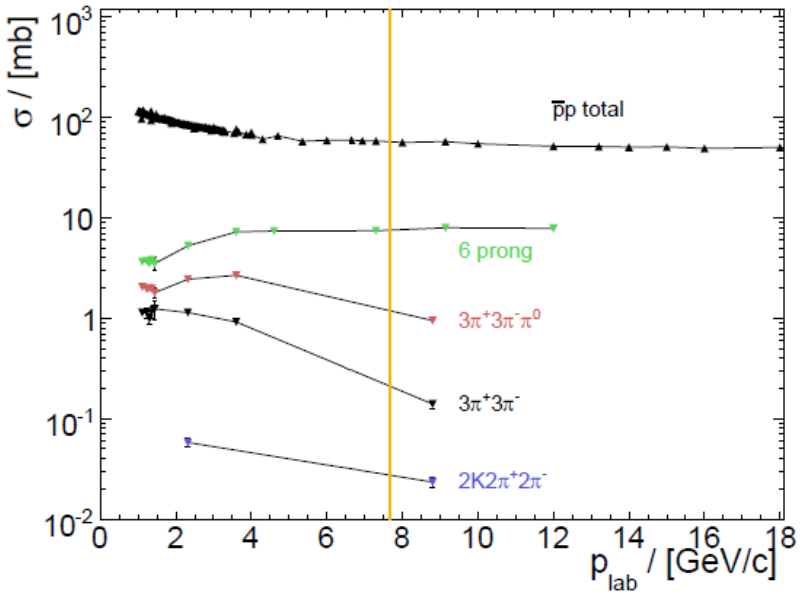

Reaction	σ [mb]	Fraction to $p\bar{p}$
2K4π	0.033	5.5 10^{-4}
$3\pi^+3\pi^-$	0.32	5.3 10^{-3}
$3\pi^+3\pi^-\ \pi^0$	1.5	2.5 10^{-2}

Tracking Devices

MVD

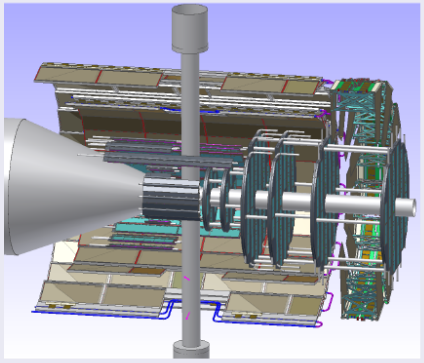

STT

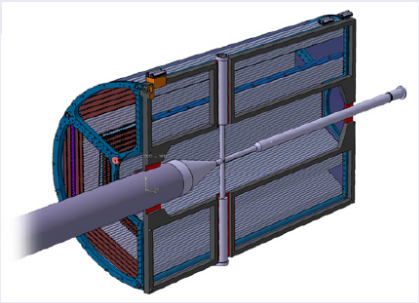

GEM

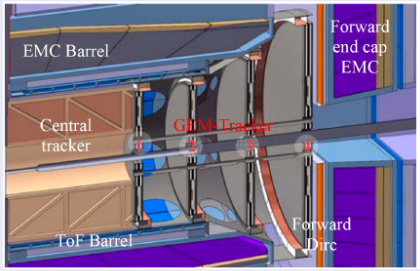

FTS

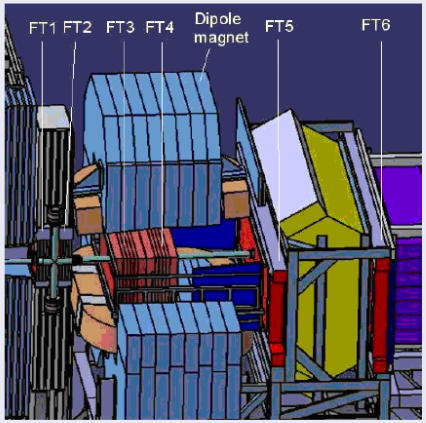

Study of the momentum distributions

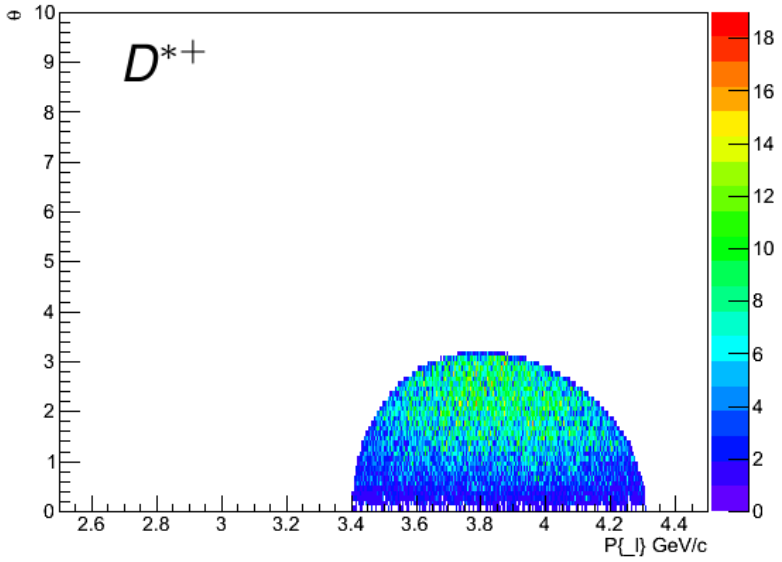

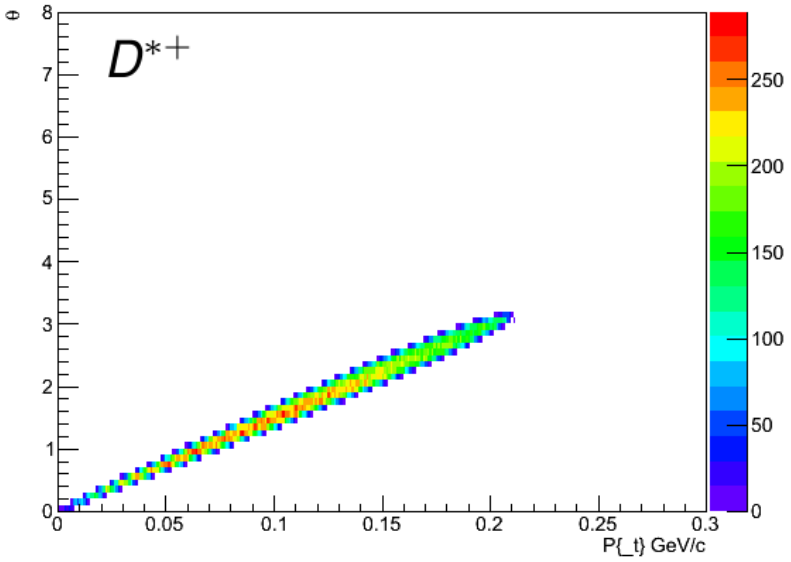

Study of the momentum distributions

Two-body decay of $D^{*+/-} \rightarrow$ the heavier D^0 carries most of the $D^{*+/-}$ boost.

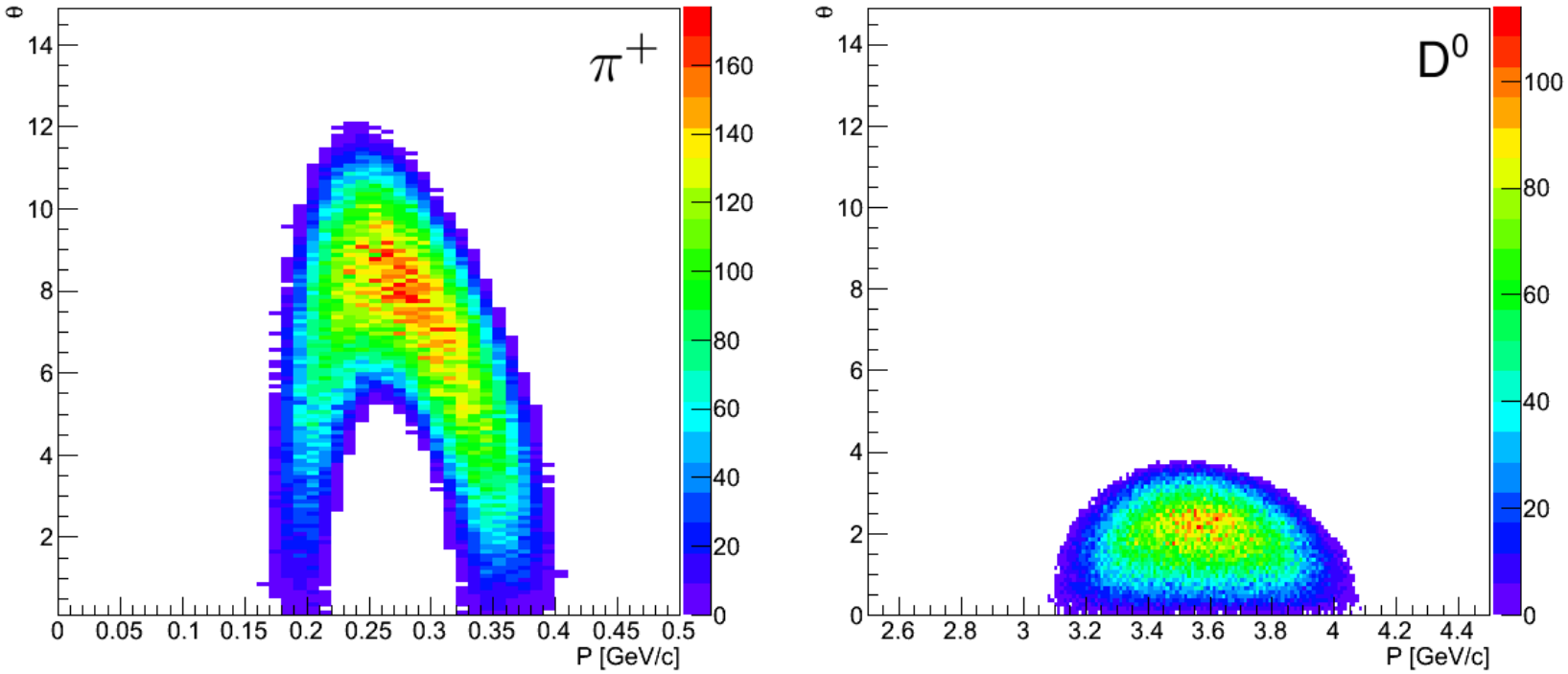

Study of the momentum distributions

Two-body decay of D^0 -> $\theta_{max}(\pi)$ =180 $\theta_{max}(k)$ =90

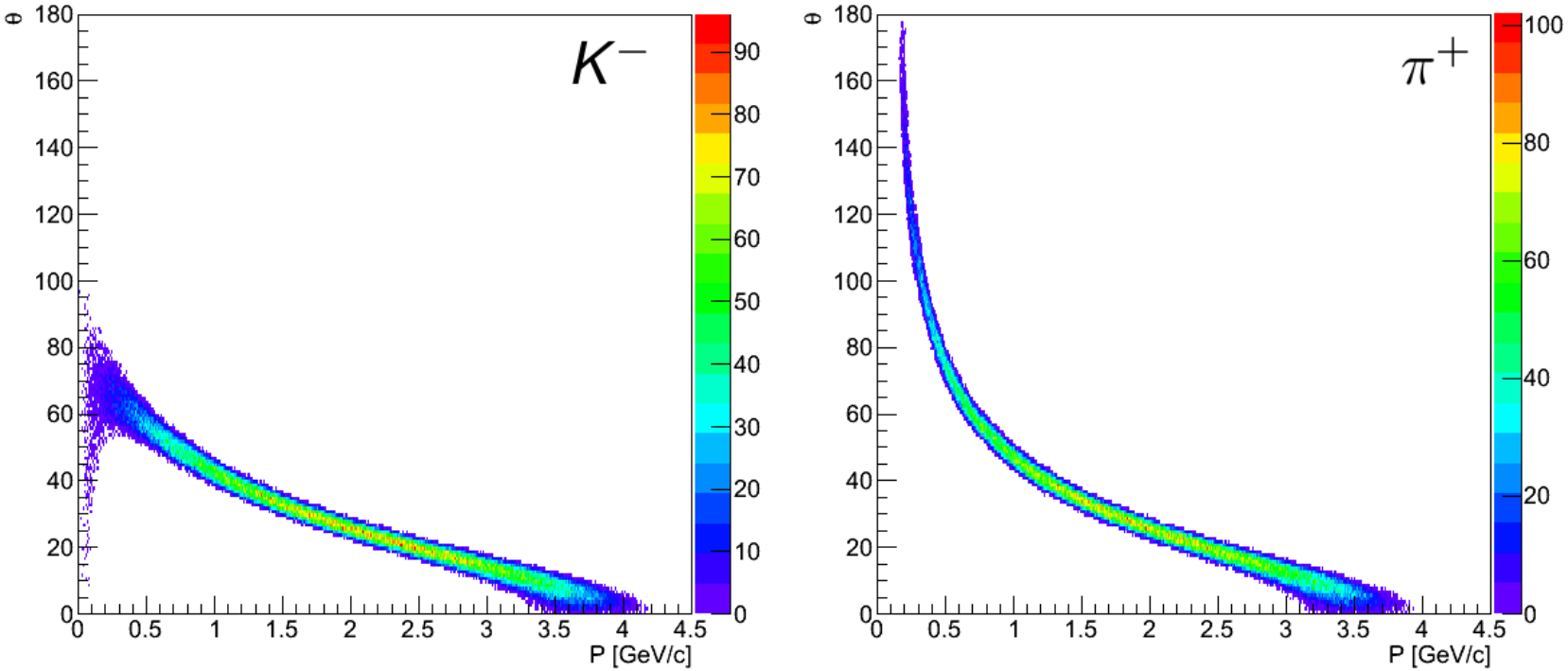

Study of the momentum distributions

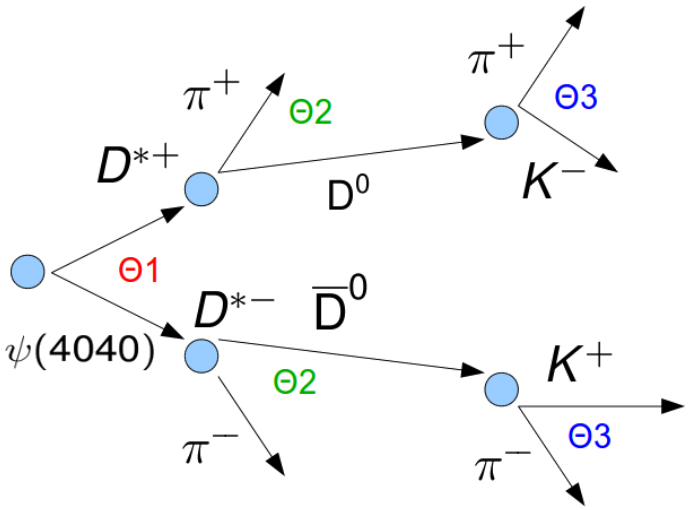

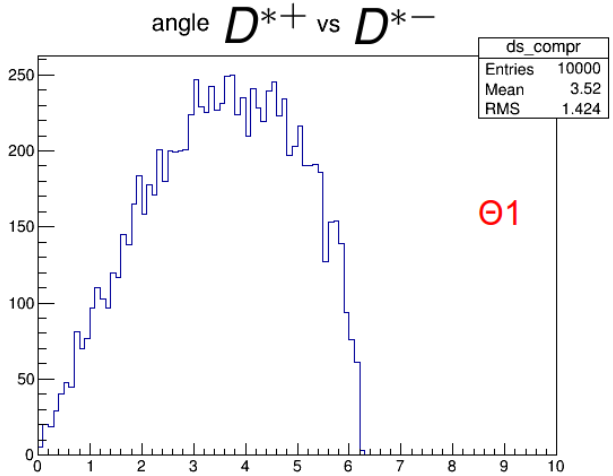

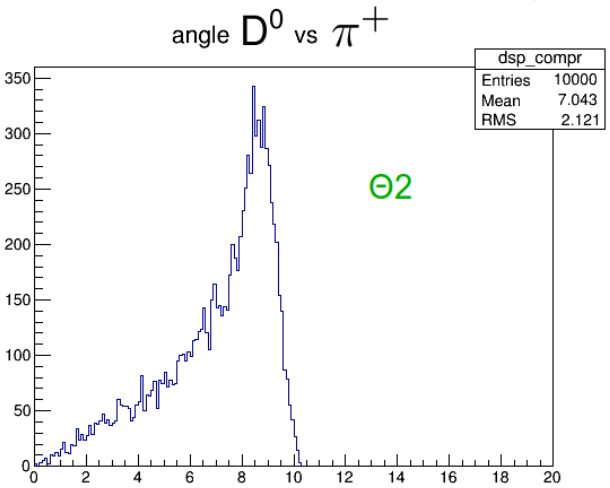

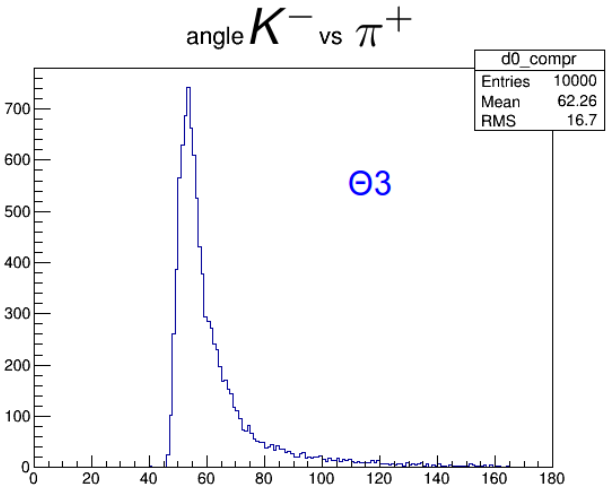

π+soft & π-soft MC

The $\pi^{\pm}$ soft are the most problematic part of the analysis. They have a really low momentum and most of them are lost because they do not hit a sufficient number of Forward-Tracker planes.

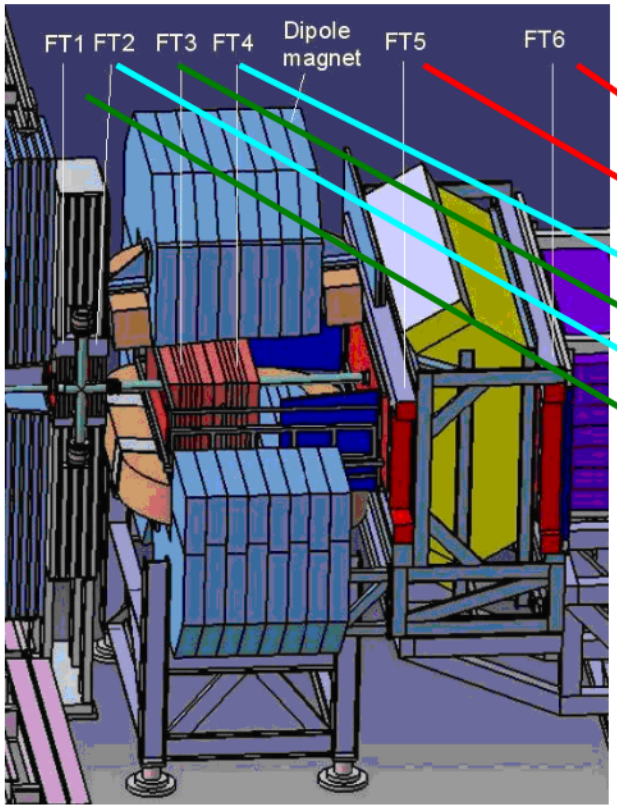

Station	#modules	#straws	z-pos. [mm]	Area x×y [mm^2]
FT1	4×8 = 32	1024	2954	1298×640
FT2	4×8 = 32	1024	3274	1298×640
FT3	4×12 = 48	1536	3945	1944×690
FT4	4×12 = 48	1536	4385	1944×767
FT5	4×25 = 100	3200	6075	4045×1180
FT6	4×37 = 148	4736	7475	5984×1480

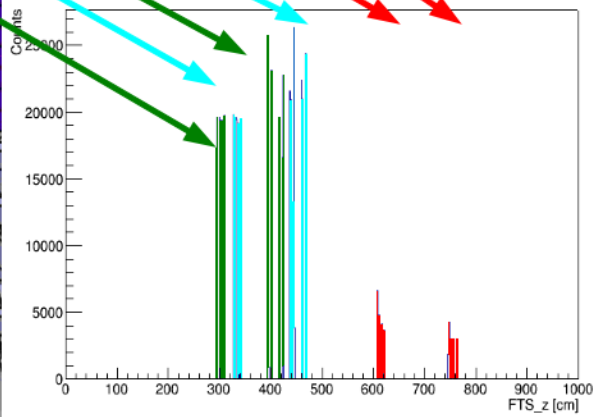

Analysis Strategy

- 4 candidates: K^+, K^-, π^+, π^-
  - Cut on the Momentum Distribution
- D^0 / $\overline{D}^0$ candidates
  - Kinematic Fit $\rightarrow$ Mass Constraint
  - Cut $\pm$100 MeV/c^2 around the D^0 mass
  - Cut on the Momentum Distribution
  - Vertex Fit $\rightarrow$ $d_{IP} < 0.2$cm
- $D^{*+/-}$ candidates
  - Cut $\pm$100 MeV/c^2 around the $D^{*+/-}$ mass
- $\psi(4040)$ candidates
  - Kinematic Fit $\rightarrow$ 4C (Beam Energy)

PandaRoot Version: MC+Reconstruction: Rev. 20840 Analysis: Rev. 21574

K^+, K^-, π^+, π^-: Cut on the Momentum Distribution

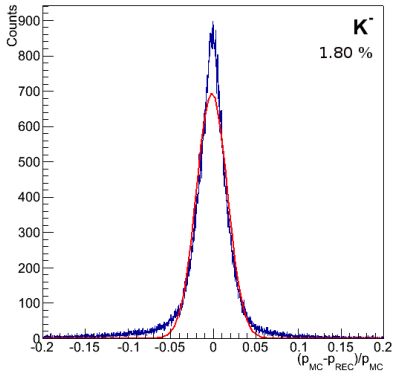

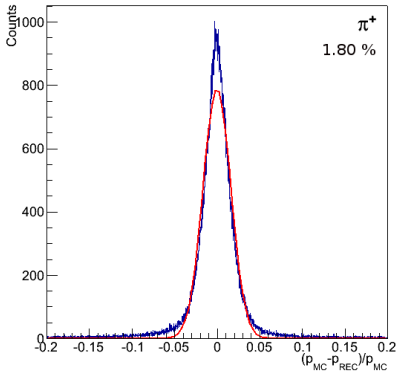

- $|p| < 4.2 \rightarrow |p| < 4.35$
- $|p_t| < 1 \rightarrow |p_t| < 1.04$
- $\theta_k < 100°$

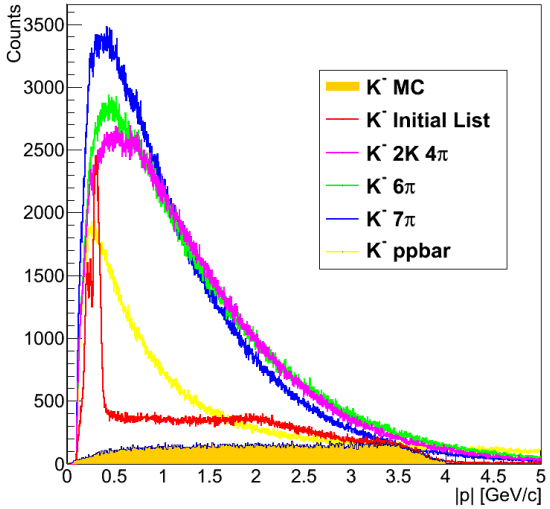

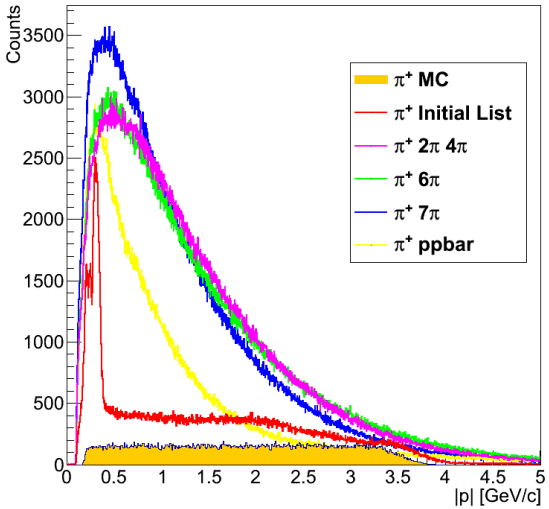

D-mesons Selection

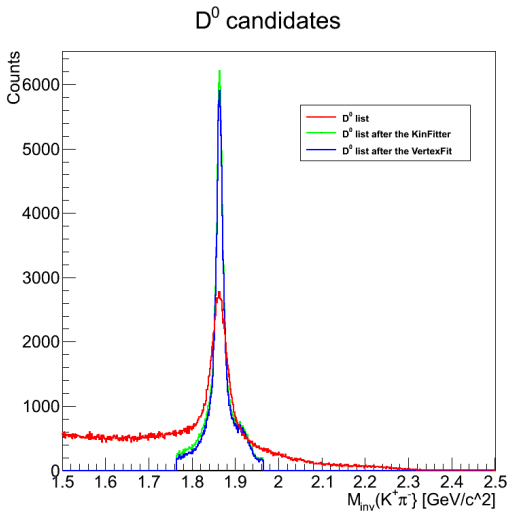

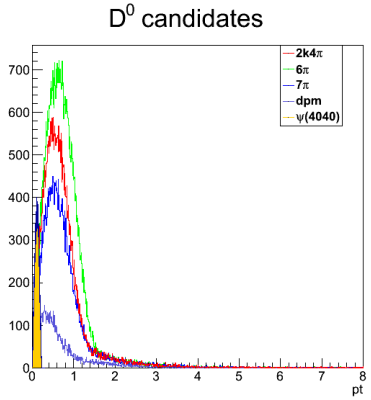

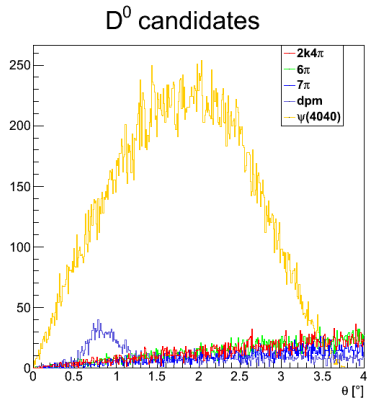

- $3.055 < |p| < 4.1 \rightarrow$
  $3.208 < |p| < 4.31$
- $|p_t| < 0.21 \rightarrow |p_t| < 0.25$
- $\theta < 4°$

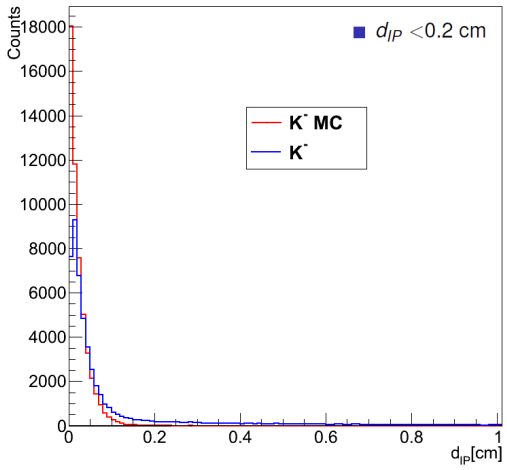

Vertex Resolution of D^0 mesons

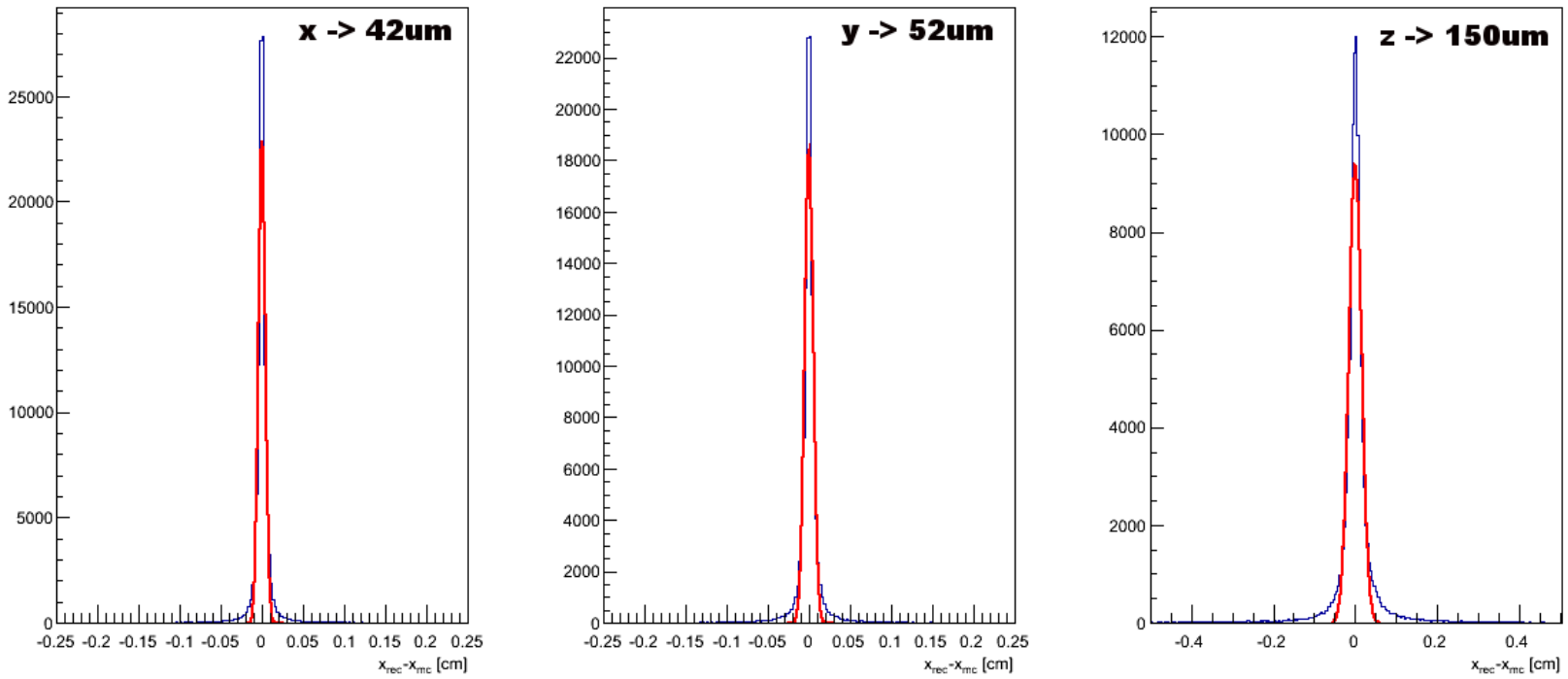

$\psi(4040)$

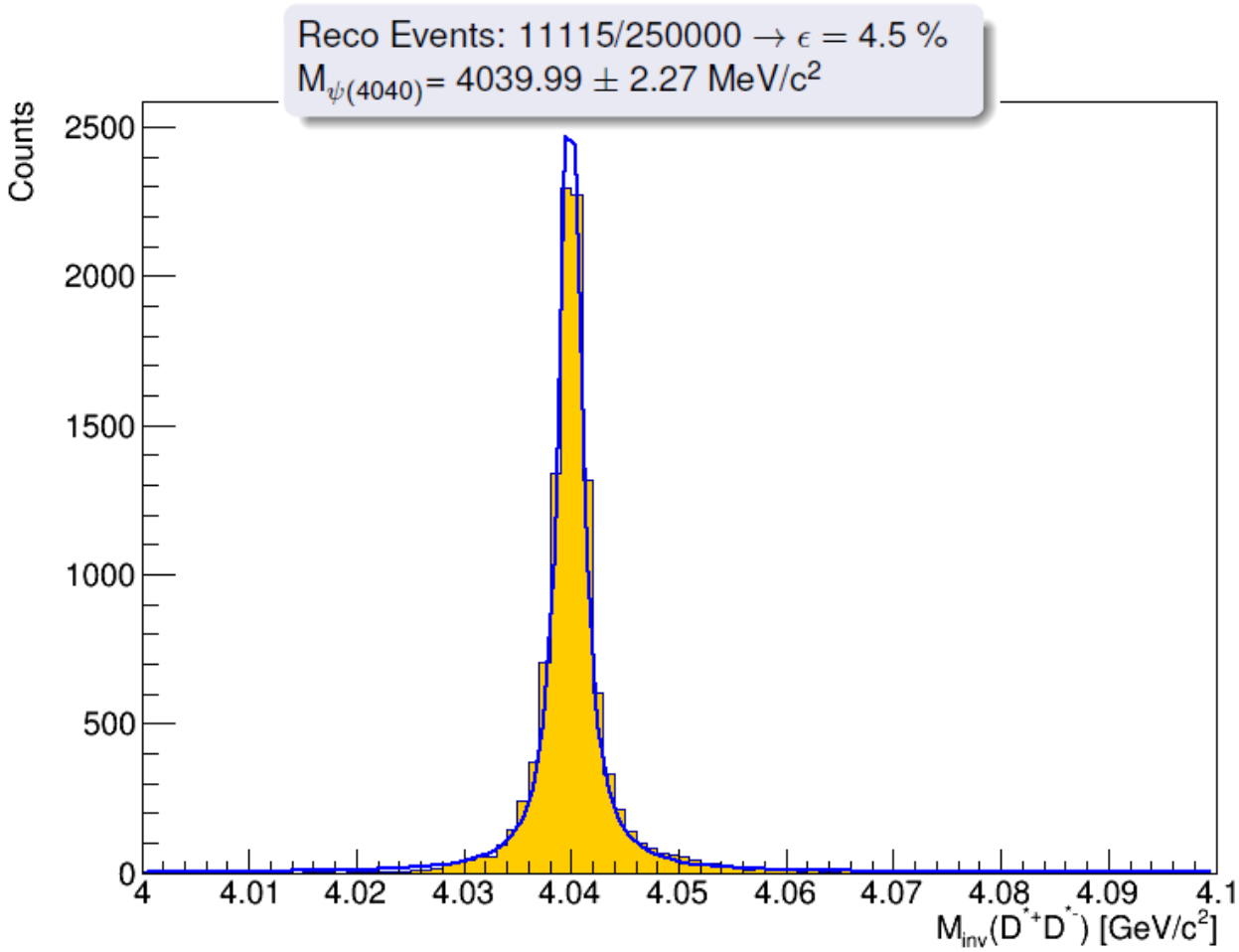
Reco Events: 11115/250000 → ε = 4.5 %
M$_{\psi(4040)}$= 4039.99 ± 2.27 MeV/c^2
Counts
2500
2000
1500
1000
500
0
4
4.01
4.02
4.03
4.04
4.05
4.06
4.07
4.08
4.09
4.1
M$_{inv}$(D^{*+}D^{*-}) [GeV/c^2]

Preliminary Estimations

$$N_{events} = \sigma \cdot L \rightarrow N_{reco} = \sigma \cdot L \cdot \epsilon_{reco}$$

$$L_{max} = 2 \cdot 10^{32} cm^{-2} s^{-1} \rightarrow L_{int} = 3.11 \cdot 10^{39} cm^{-2}$$

$$N_{events}(\psi(4040)) = 2.80 \cdot 10^{6}$$

$$N_{reco}(\psi(4040)) = 1.24 \cdot 10^{5}$$

for 6 months of data taking

Preliminary Estimations

- Signal Events: 250000
- Background Events: 900000

$$N_{reco}(\psi(4040)) = 1.24 \cdot 10^5$$

Channel	σ [mbarn]	N_{events}	ϵ_{reco}& RP
$\psi(4040)$	$0.9\ 10^{-3}$	$2.80 \cdot 10^6$	4.45%
2K4π	0.033	$1.03 \cdot 10^{11}$	$2.22 \cdot 10^{-6}$
6π	0.32	$9.95 \cdot 10^{11}$	$1.11 \cdot 10^{-6}$
7π	1.5	$4.67 \cdot 10^{12}$	$3.33 \cdot 10^{-6}$
$p\overline{p}$	60	$1.87 \cdot 10^{14}$	–

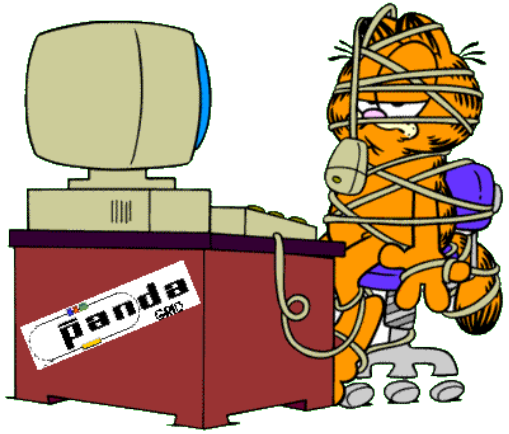

Conclusions

- $\epsilon_{\psi(4040)}$=4.5%
- $M_{\psi(4040)}$=4039.99$\pm$2.27 MeV/c^2
- More Statistics for the Background $\rightarrow$ S/B
  - Investigate the PID perfomance
  - Cut on the opening angles between $D^{*+/-}$

Thanks for the attention!!!

Backup Slides

The Micro-Vertex Detector

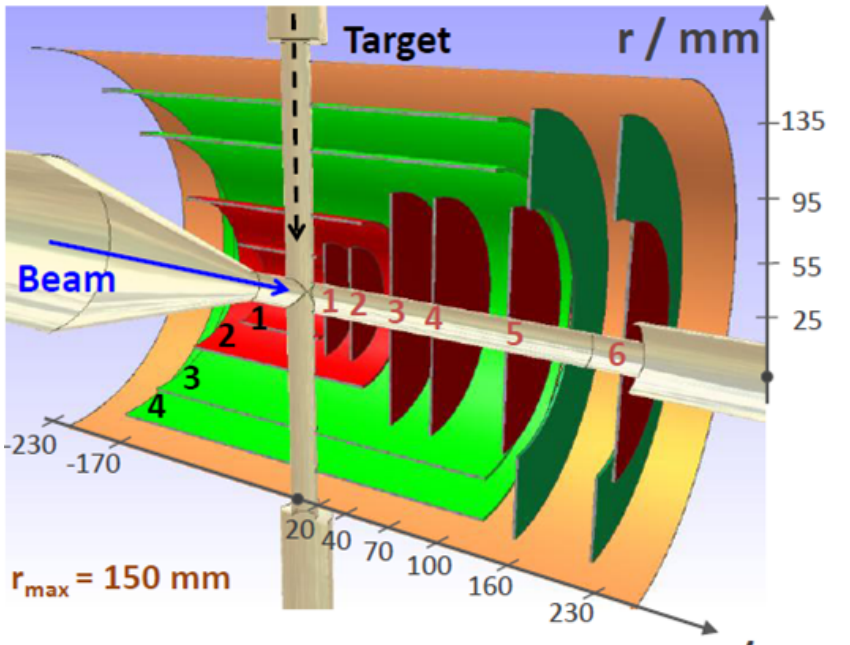

MVD: Schematic layout

Layout

- 6 Forward Disks
- 4 Barrels

Geometrical Constraint

- Maximum Radius: 15 cm
- Dimension along z: $\pm$ 23 cm

Readout Channels

- $\sim 10^7$ Hybrid Pixels
- $\sim 2 \cdot 10^5$ Double-Side Microstrips

The Micro-Vertex Detector

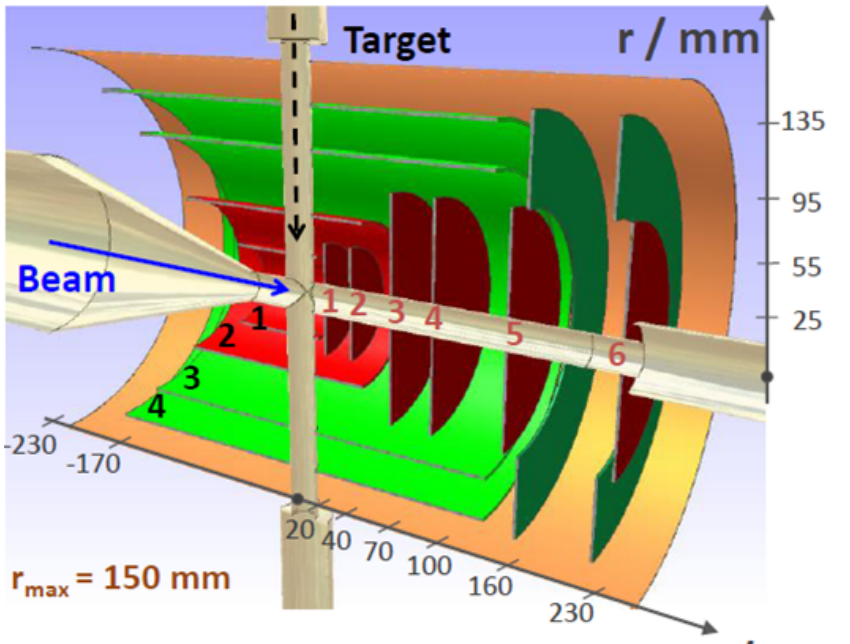

MVD: Schematic layout

Requirements

- Spatial resolution < 100 μm
- Momentum resolution $\delta p/p \sim 2\%$
- Time resolution ≤ 10 *ns*
- High rate capability
- No hardware trigger
- Radiation tolerance $\sim 10^{14}$ $n_{1\text{MeV eq}}\text{cm}^{-2}$
- Low material budget
- PID by dE/dx

The Straw Tube Tracker

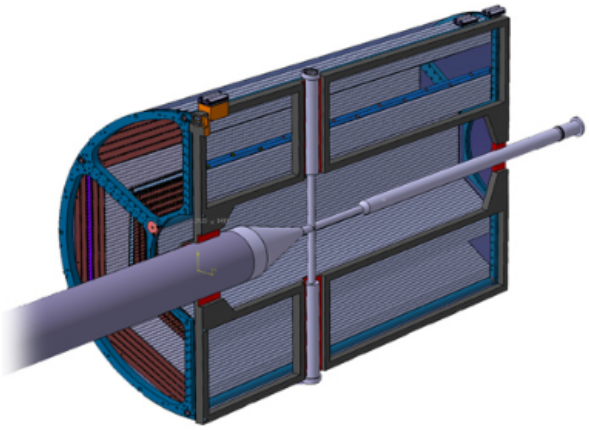

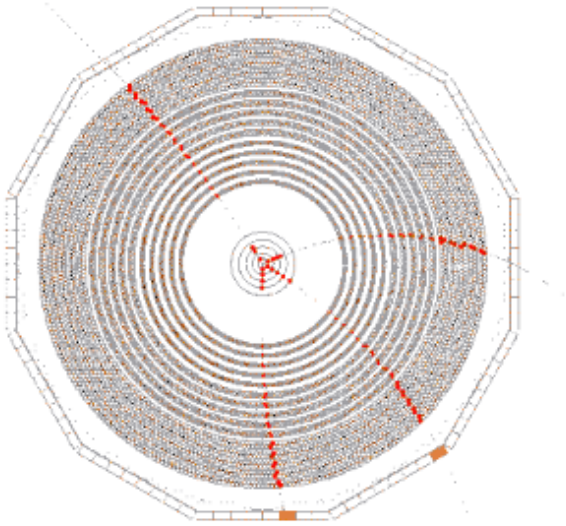

STT Internal radius	15 cm
STT External radius	42 cm
Number of double layers	12
Skew angle double layer 5	$+3^0$
Skew angle double layer 6	-3^0
Tube wall thickness	30 µm
Tube internal diameter	10 mm
Axial tube length	150 cm
Wire diameter	20 µm
Tube wall material	Al-Mylar
Wire material	Au plated W/Re
Gas mixture	Ar/CO_2 (90/10)
Single tube transparency	3.7×10^{-4} X/X_0
ρ/φ plane resolution	150µm
z resolution	1 mm