Super-FRS with Hot Cell

Helmut Weick, GSI

FAIR-France Industry Meet

19th April 2023

- Super-FRS Overview
- Target Area
- Hot Cell Layout
- Tools for Maintenance

Produce Rare Isotopes

Removal of nucleons in quasi-free nucleon-nucleon collisions
E ≳ 100 MeV/u

Projectile fragmentation

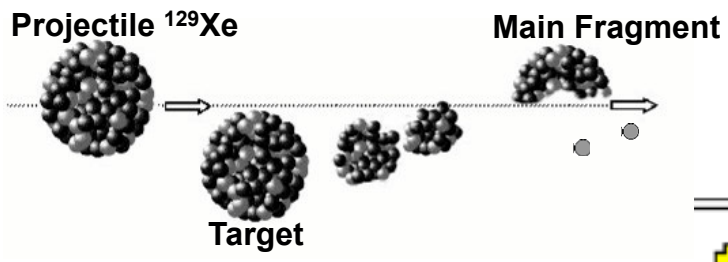

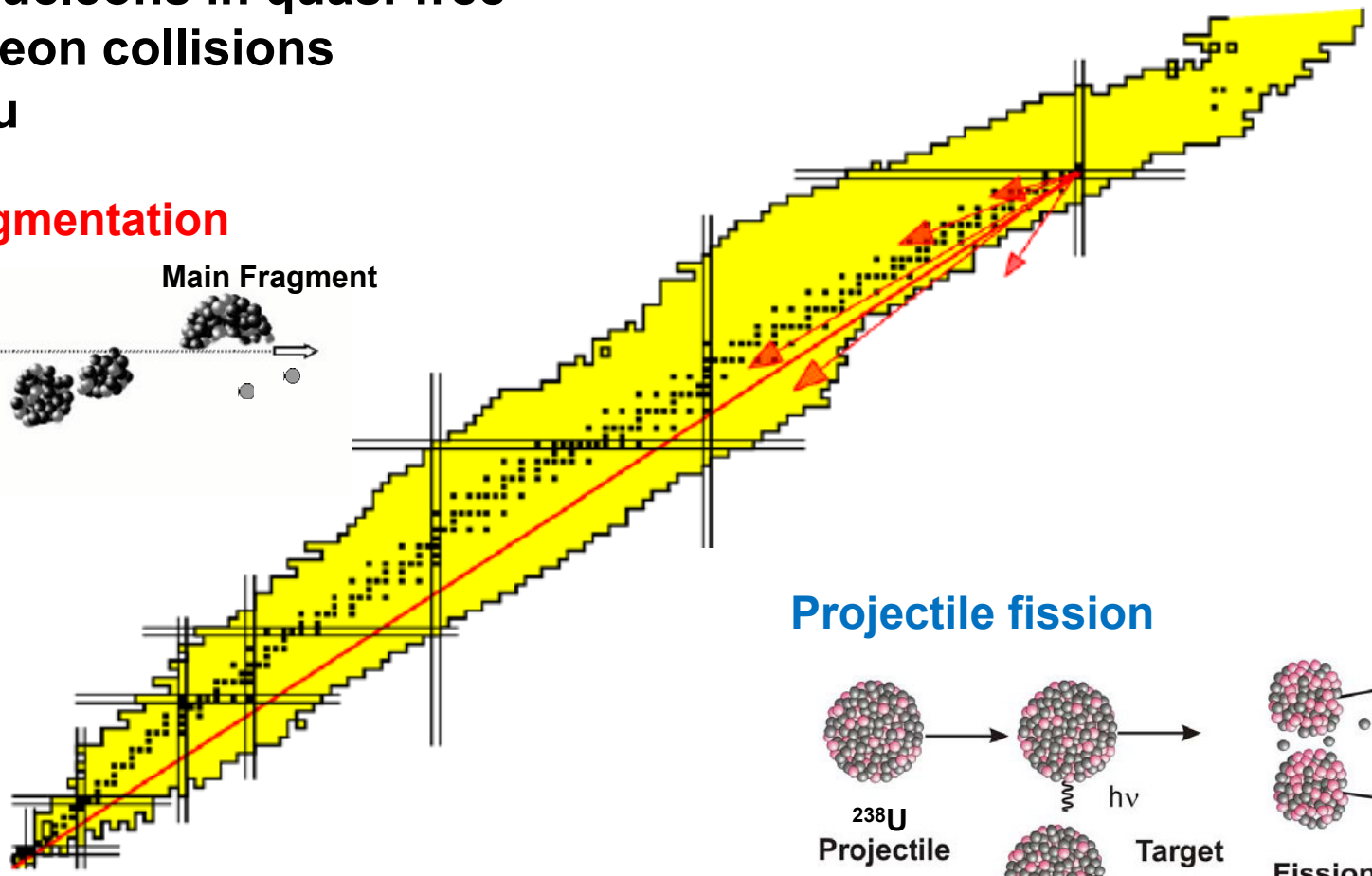

Projectile fission

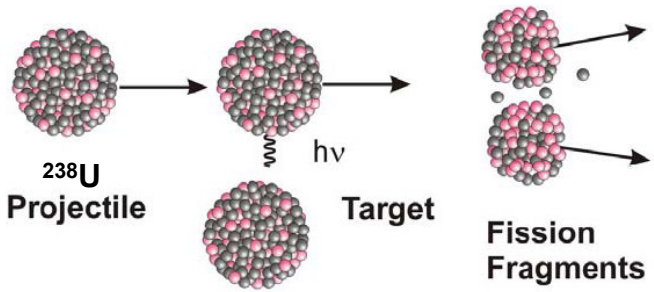

Super-FRS to produce and separate rare isotopes

rad. hard dipole 95 t

33 SC multiplets

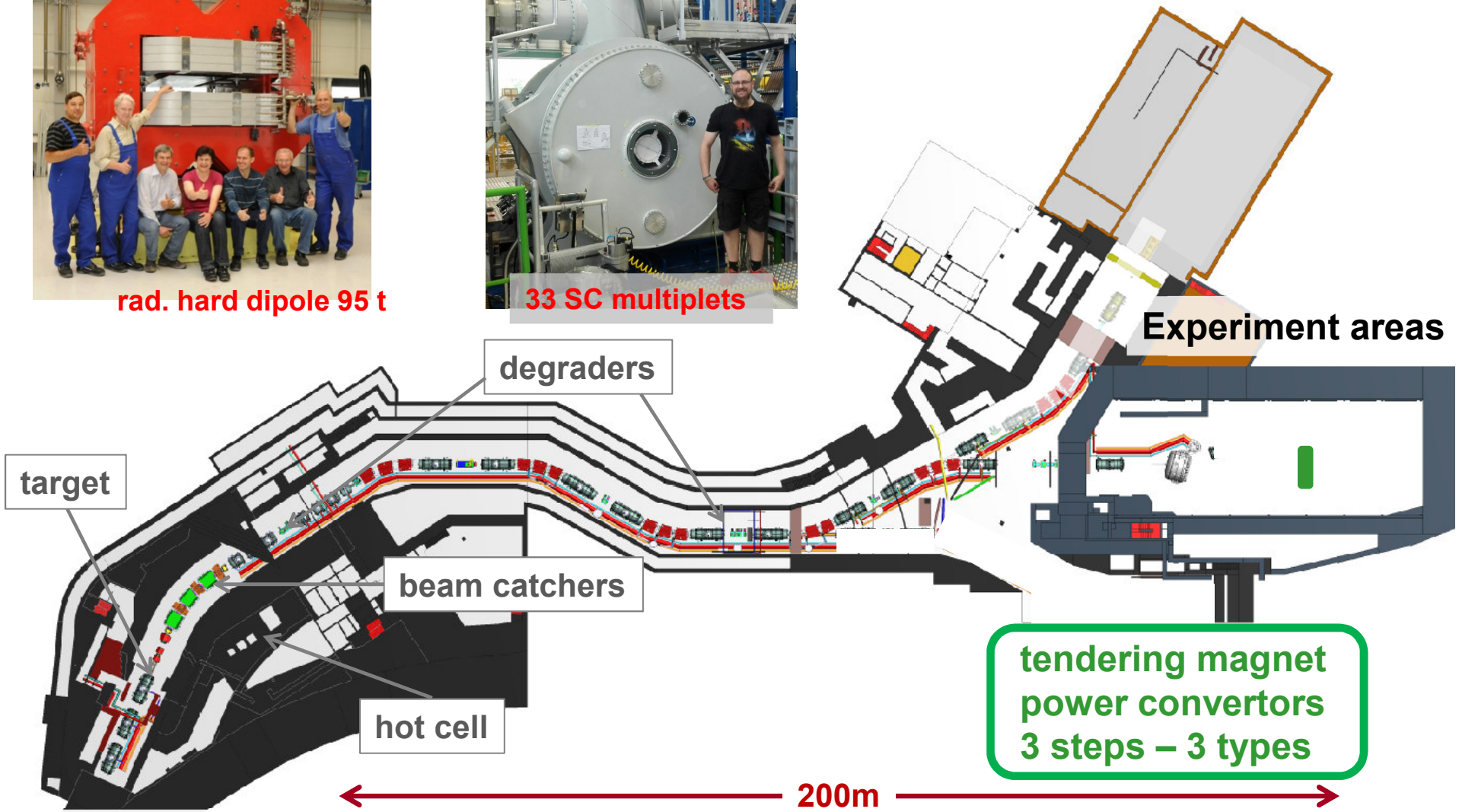

^{238}U beam 1.5 GeV/u, 3e11/s

Building 18

Target Area

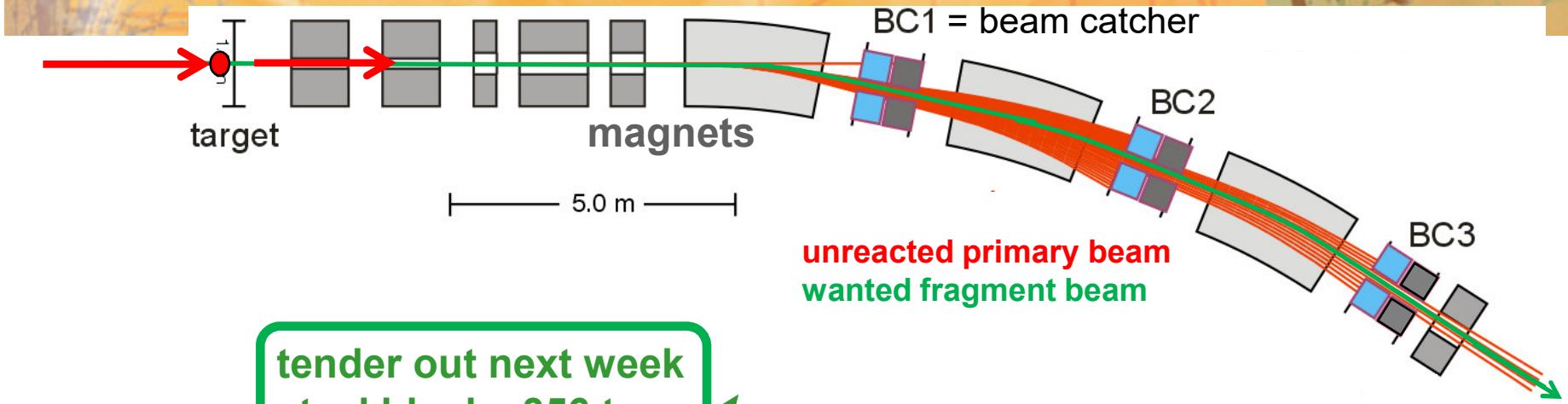

tender out next week
steel blocks 356 tons

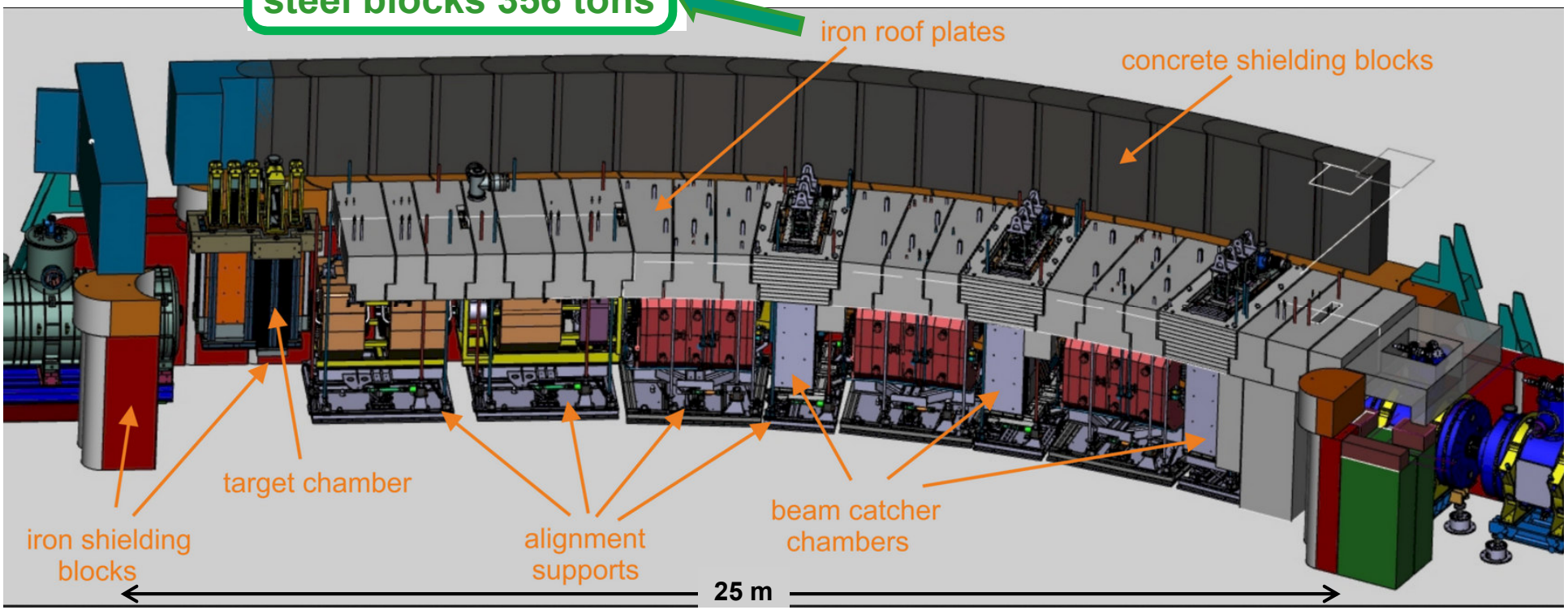

Super-FRS Target Area

Beamline devices are mounted on shielding plugs

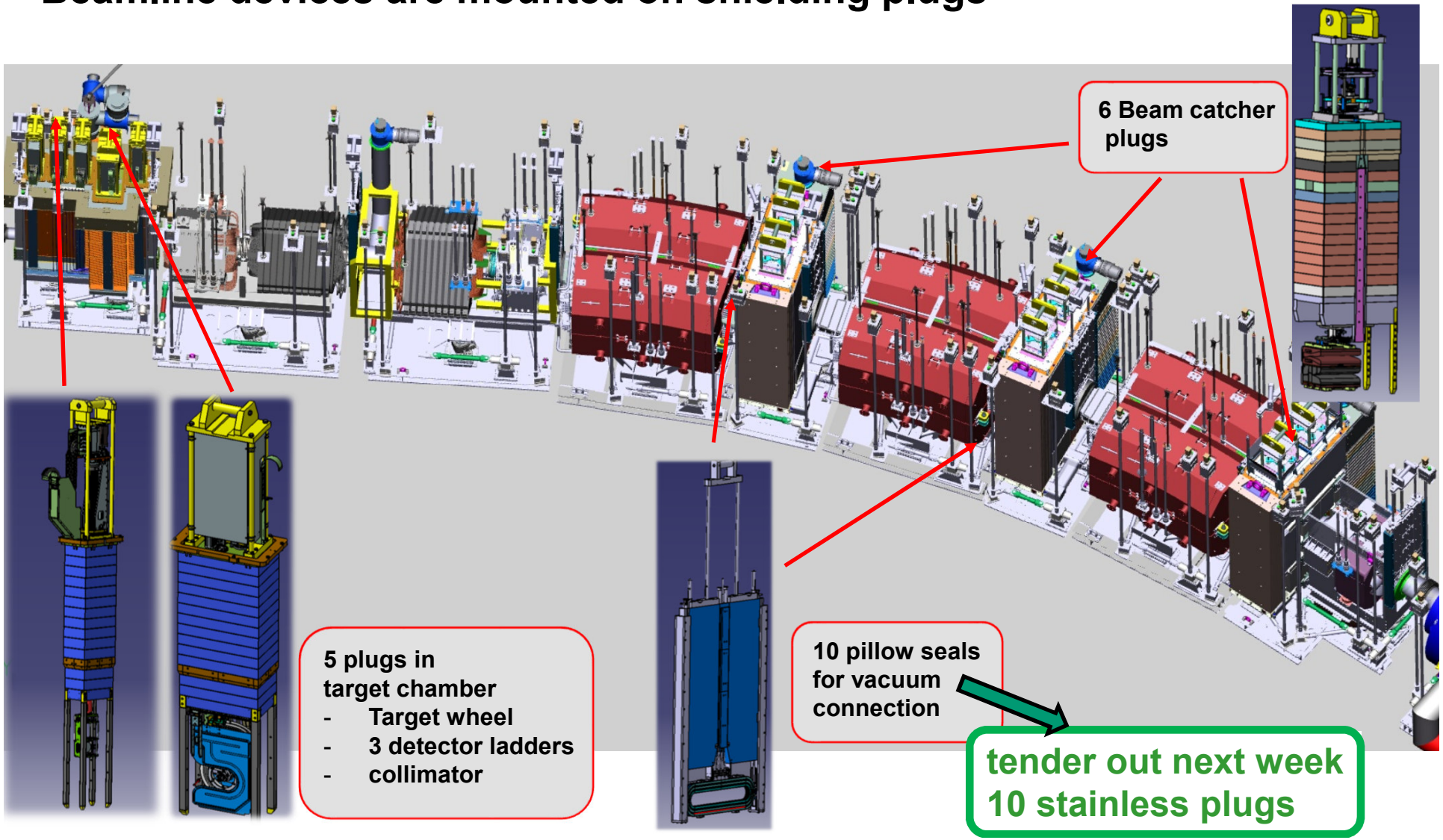

Magnets and Vacuum Chambers

sc dipole vacuum chambers

- sc dipole VC, FoS for 11°, 9.75° redone by Omega/TVP -> FDR
- 11 more of same design needed --> new tender
- sc branching dipoles VC, tender floated for 3 of Y-type

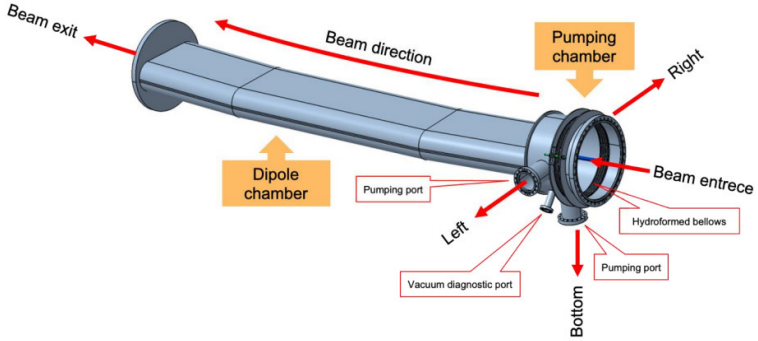

Radiation hard (nc) dipole magnets

- FoS built by BINP and at GSI, many changes done on after delivery.
- Tender, pre-qualification round.

Titanium vacuum chambers

- Stress by pulsed beam on chamber wall
- Tender running, pre-qualification finished.

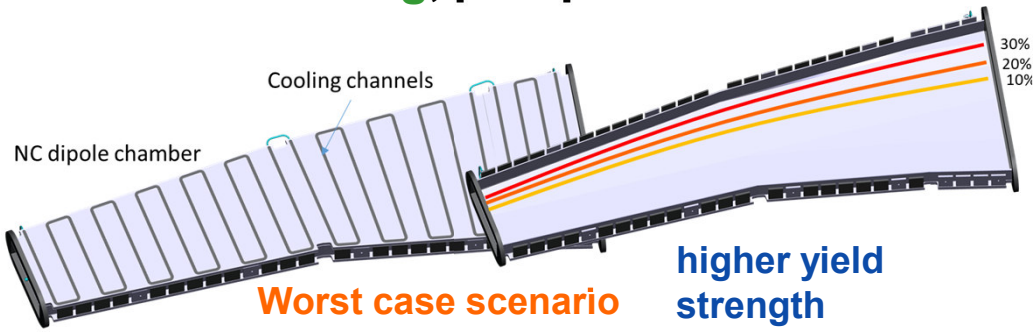

Worst case scenario

ΔT_{max}= 290 K in 100ns

$\rightarrow P_{compress}$ ~ 1000 MPa

higher yield strength

SS 316LN: 230 MPa

Ti-6Al-4V: 1000 MPa

Target

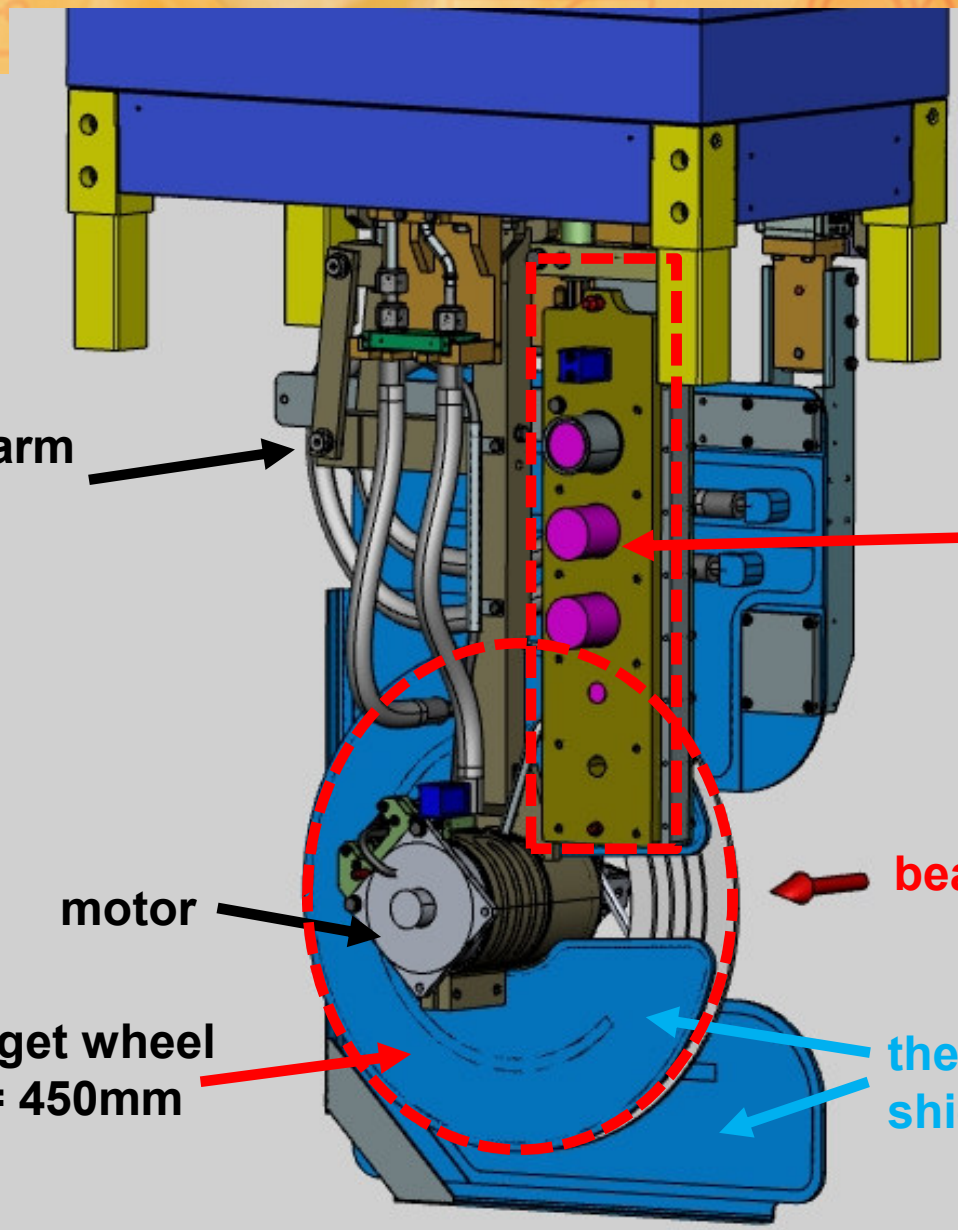

Michel Lindemulder,
Henk Smit, KVI-CART

university of groningen

Target Chamber

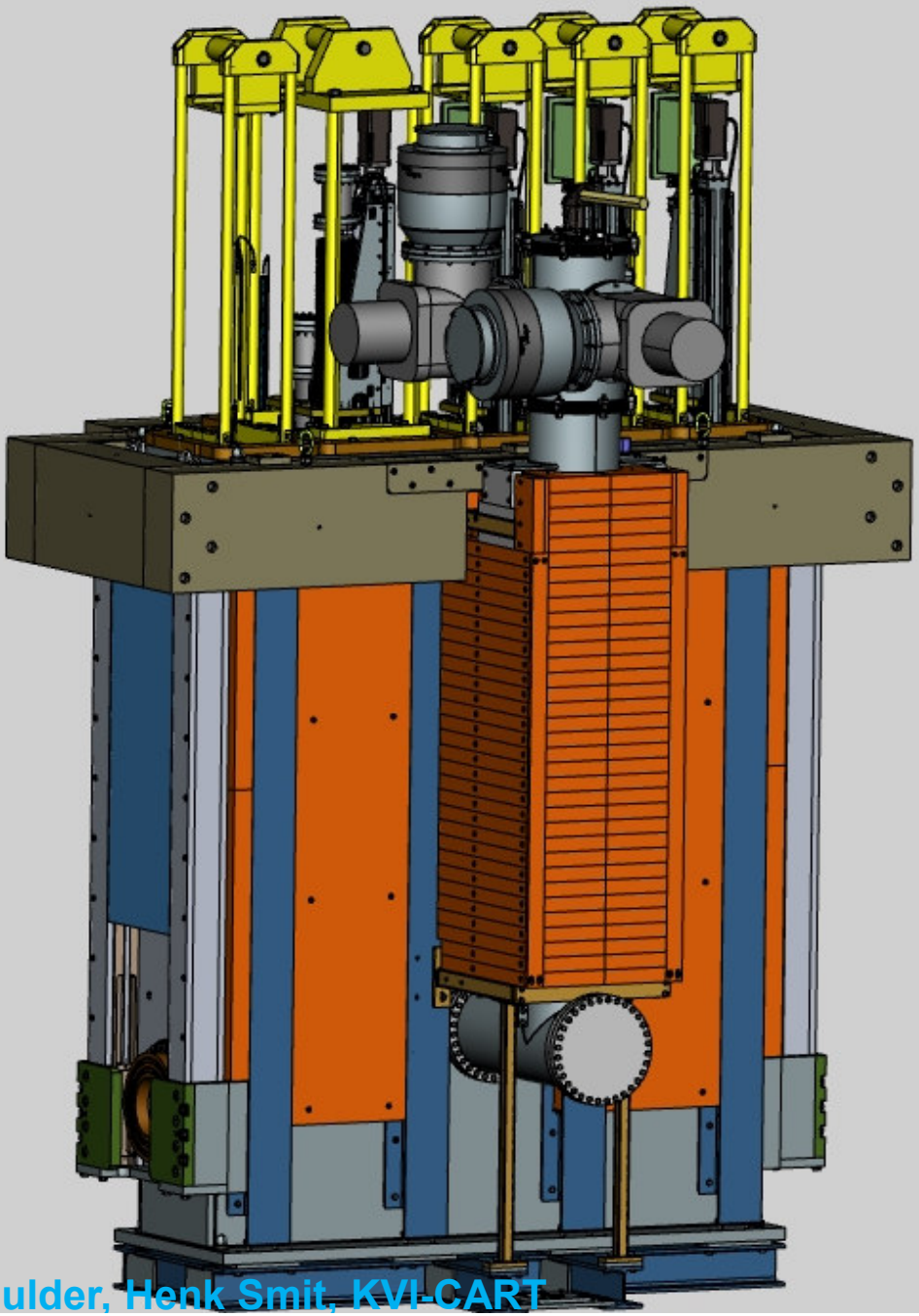

target plug
+ collimator
+ detectors
+ chamber
+ pumps and shielding

Manipulator Test Stand

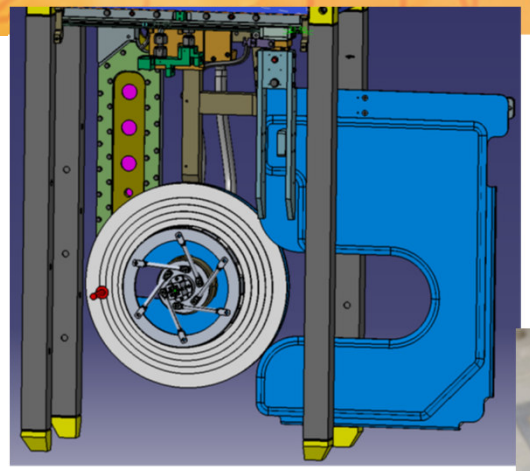

remove
cooling plate

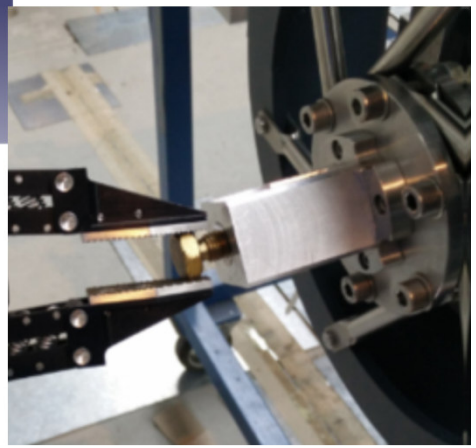

release
quick lock

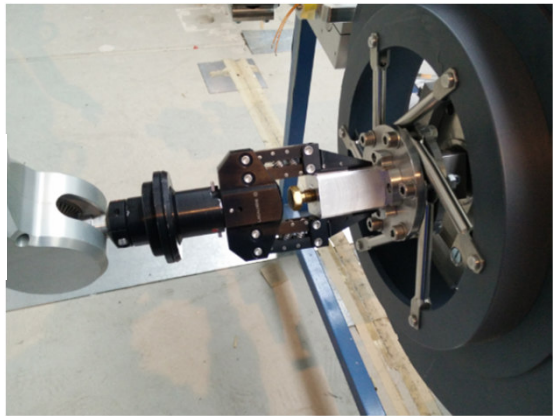

remove
target wheel

Beam Catchers

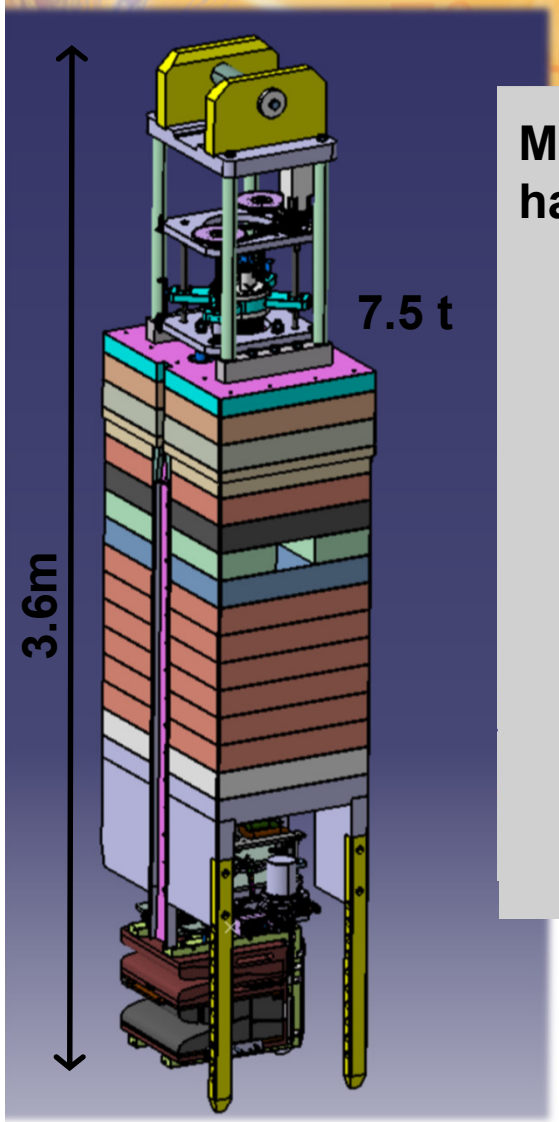

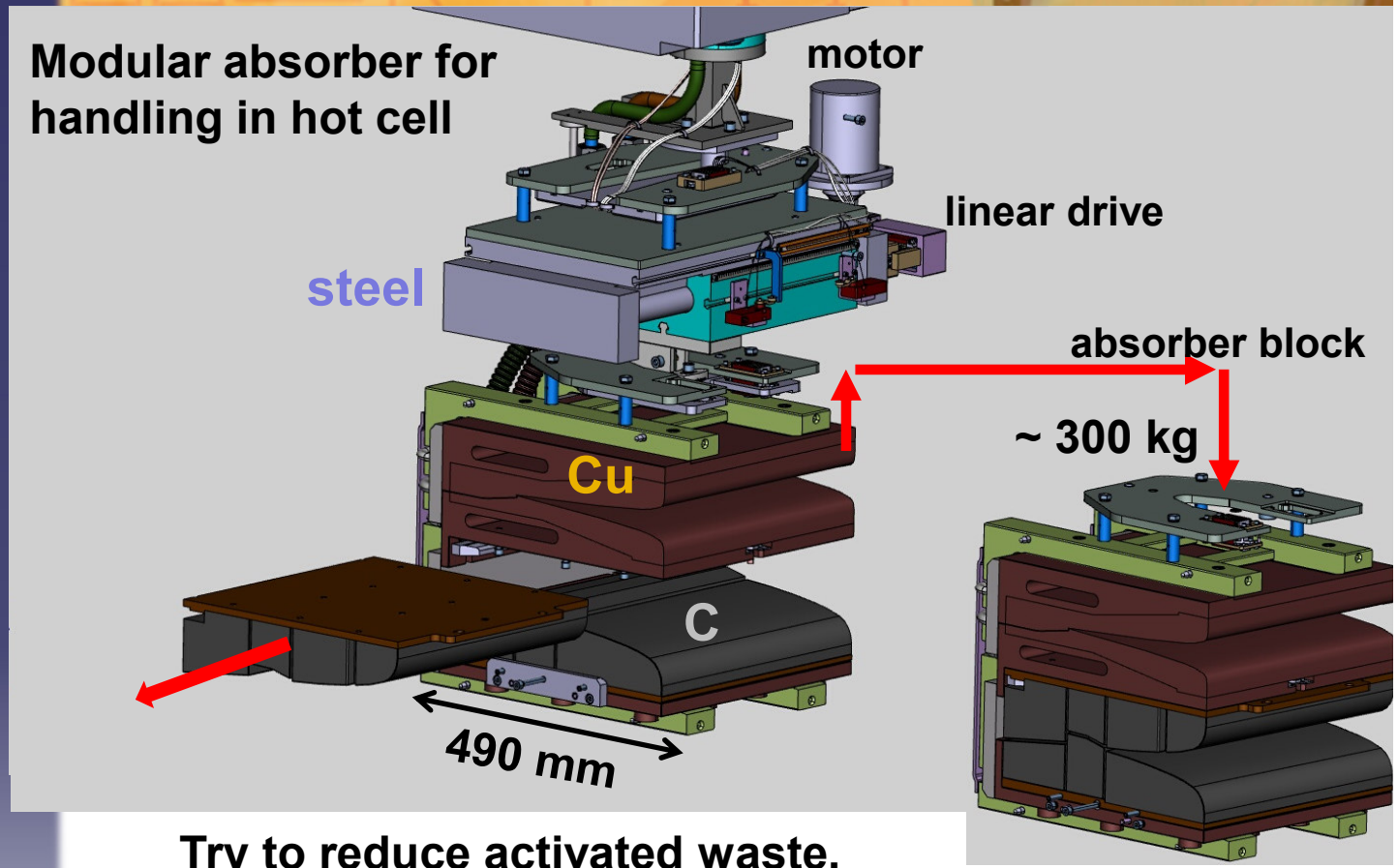

Try to reduce activated waste,
do not exchange whole block

Beam of $3x10^{11}$ U/s for 4x90days + 1 year cooling:
Ac (217 kg Cu) = 1.5e12 Bq -> at 1m H = 107 mSv/h
Ac (41 kg C) = 1.6e11 Bq -> at 1m H = 0.12 mSv/h

CSIR - CMERI
Abhijit Mahapatra

Radiation Shielding

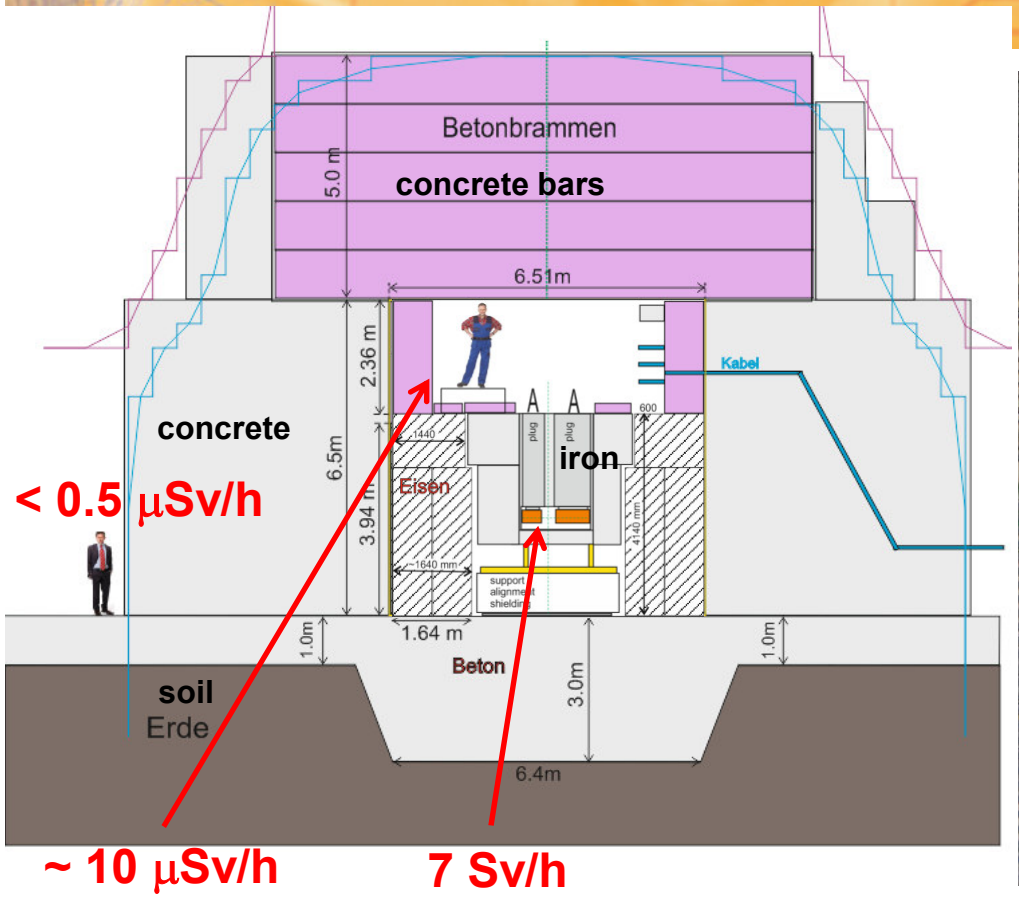

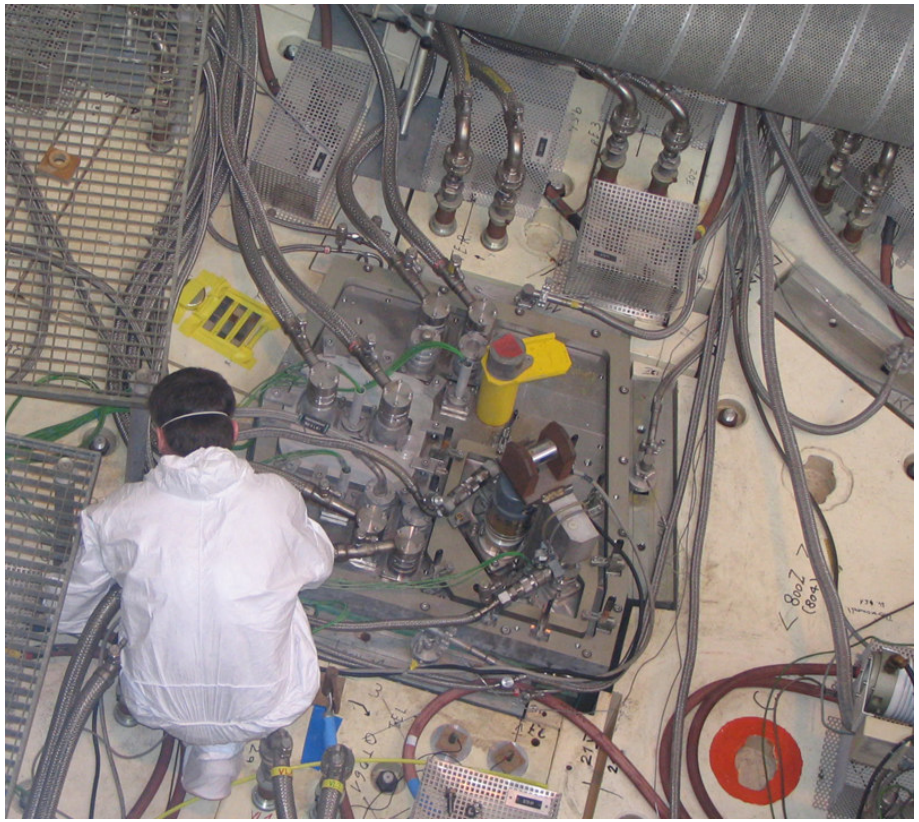

PSI Switzerland same concept, top of chamber

Activation after beam times, access to maintenance tunnel is possible thanks to integrated shielding.

Transport to Hot Cell

Remove 6m concrete bars, position flask, pull plug into shielding flask (60 t), move to hot cell (about once per year).

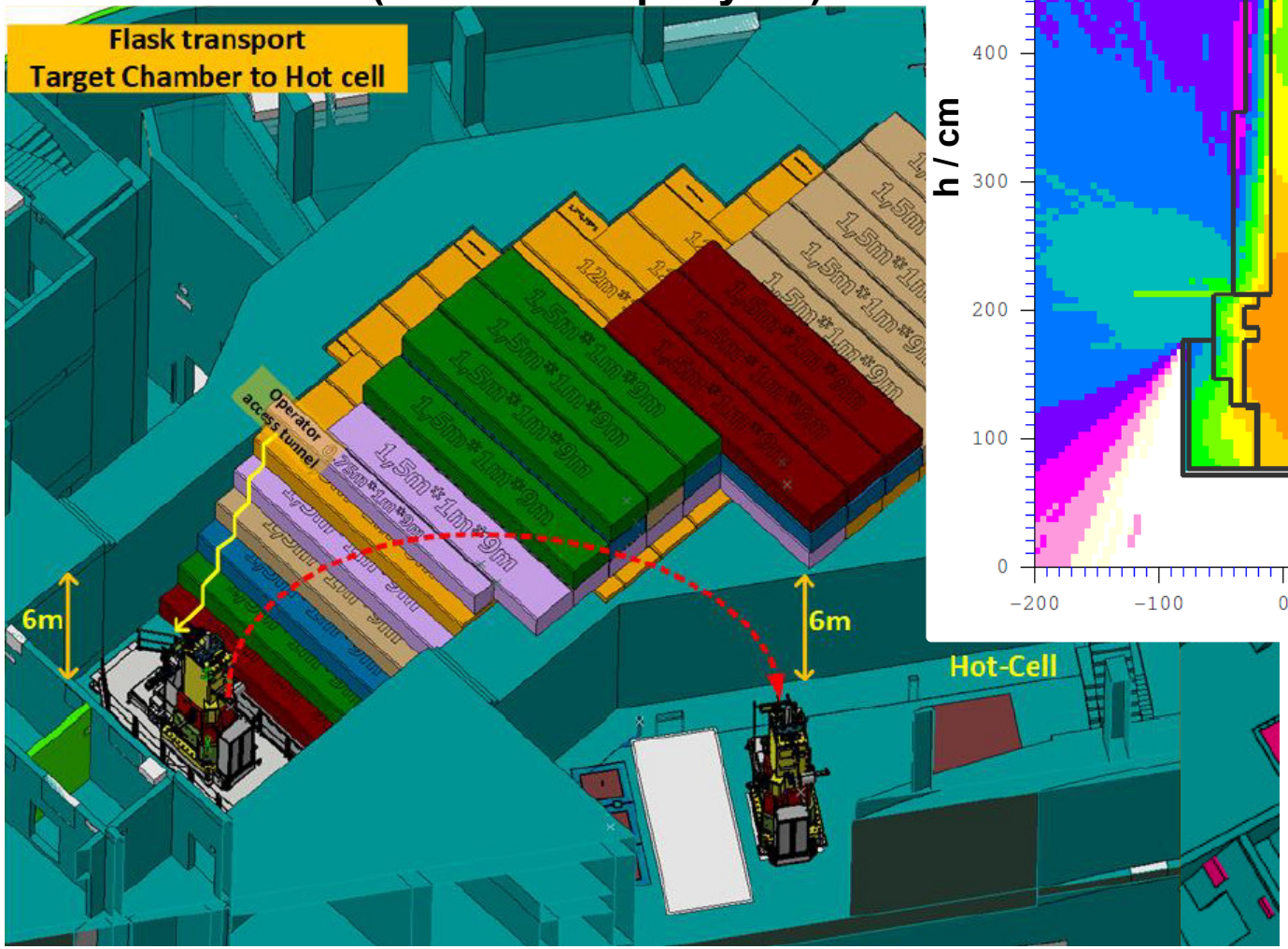

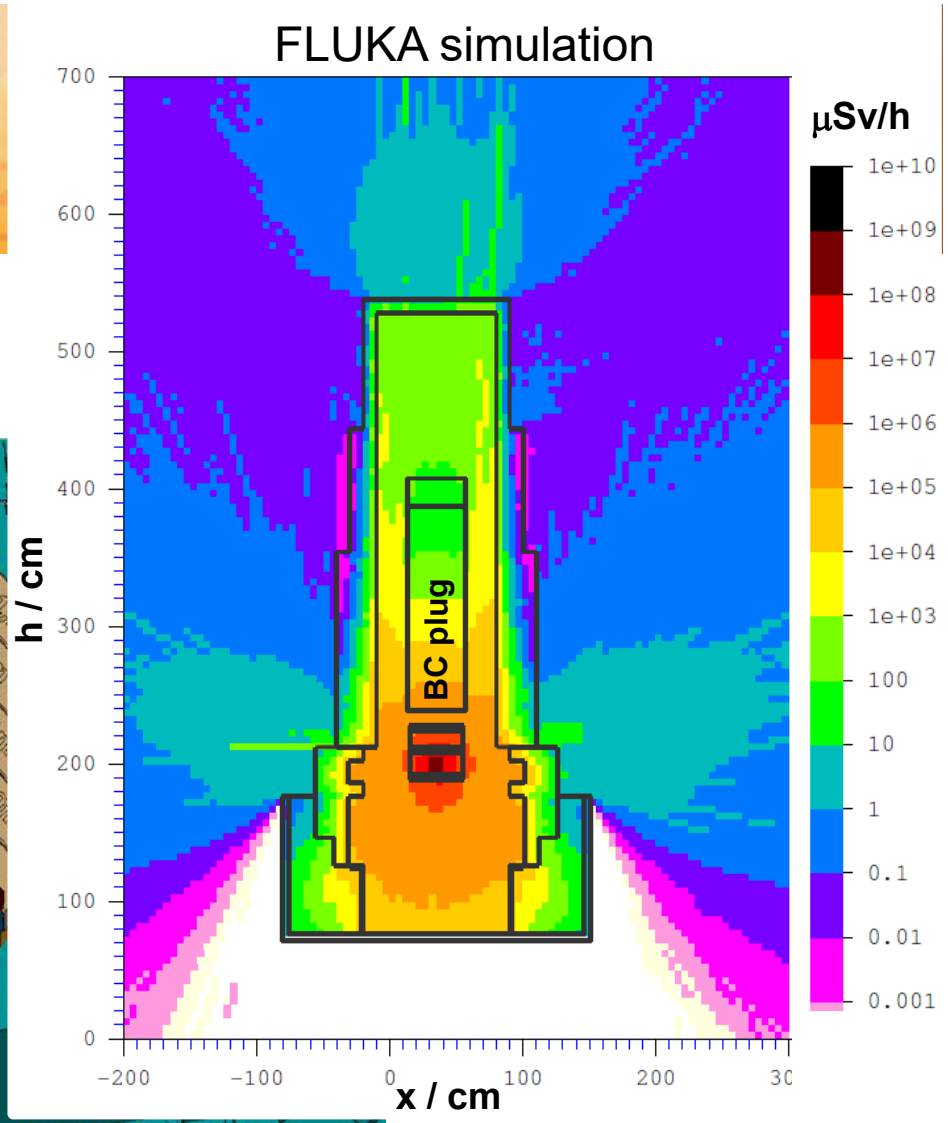

F. Amjad, E. Kozlova

Hot Cell Layout

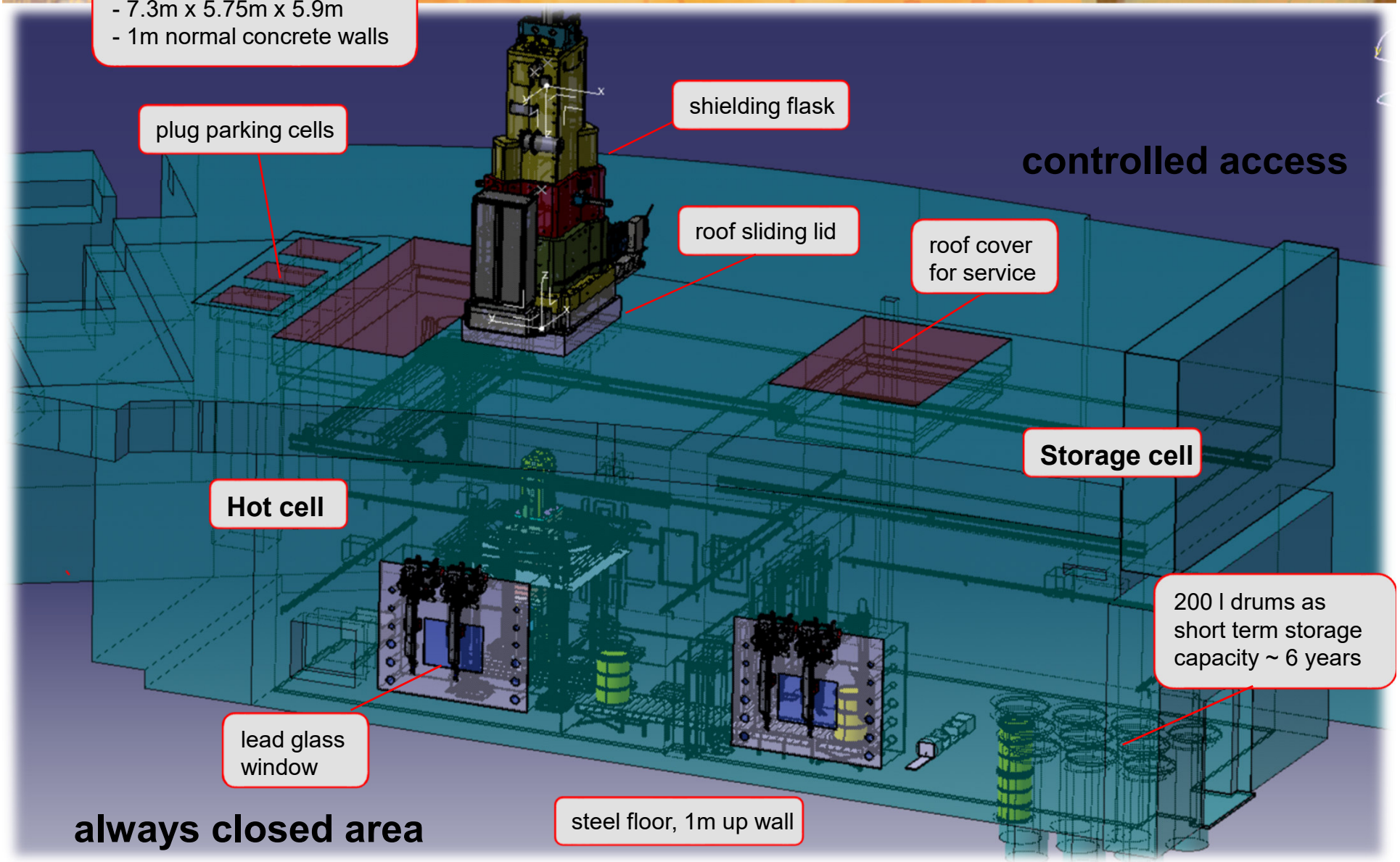

Plug Transport to Hot Cell

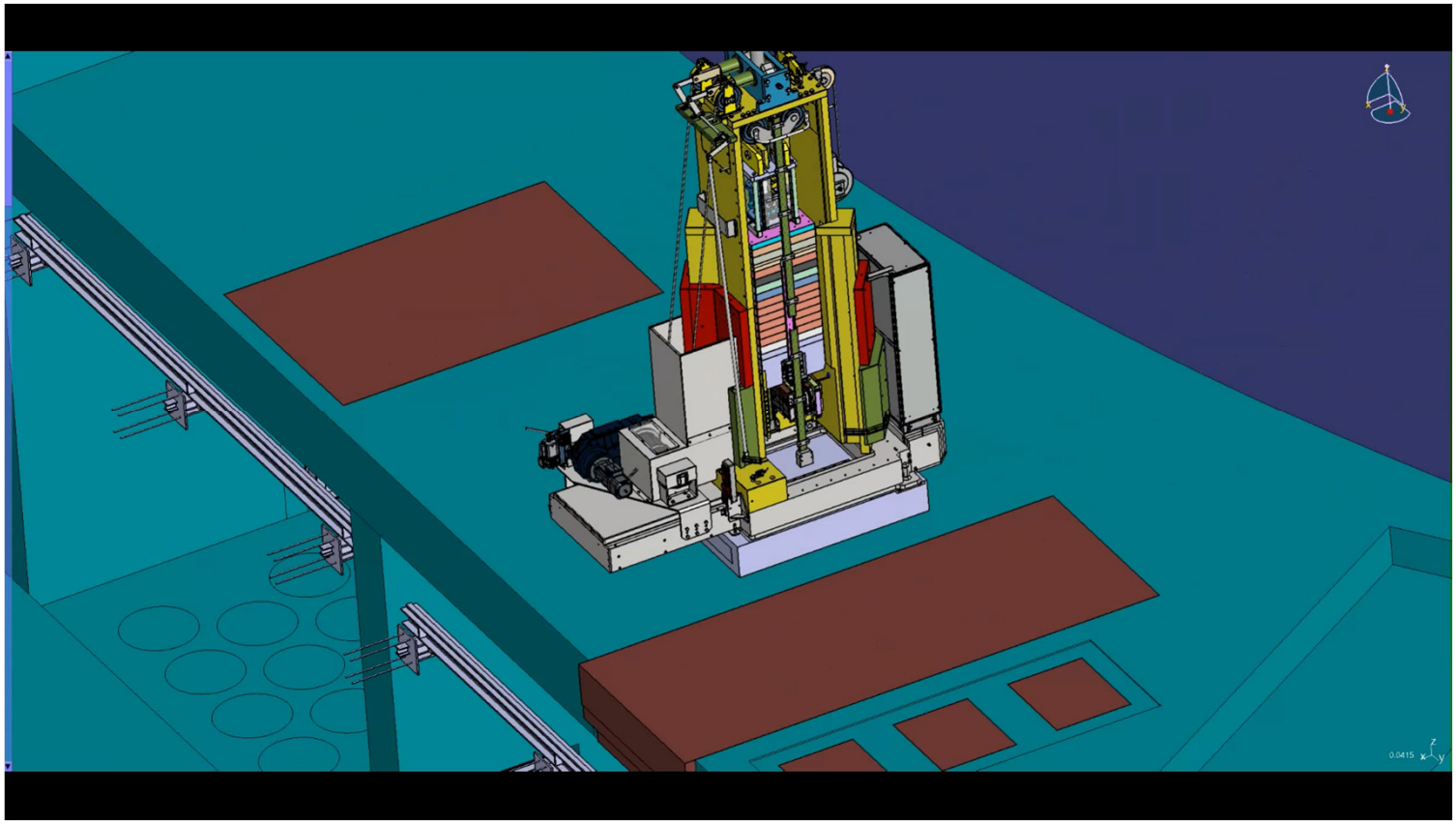

The Hot Cell Complex

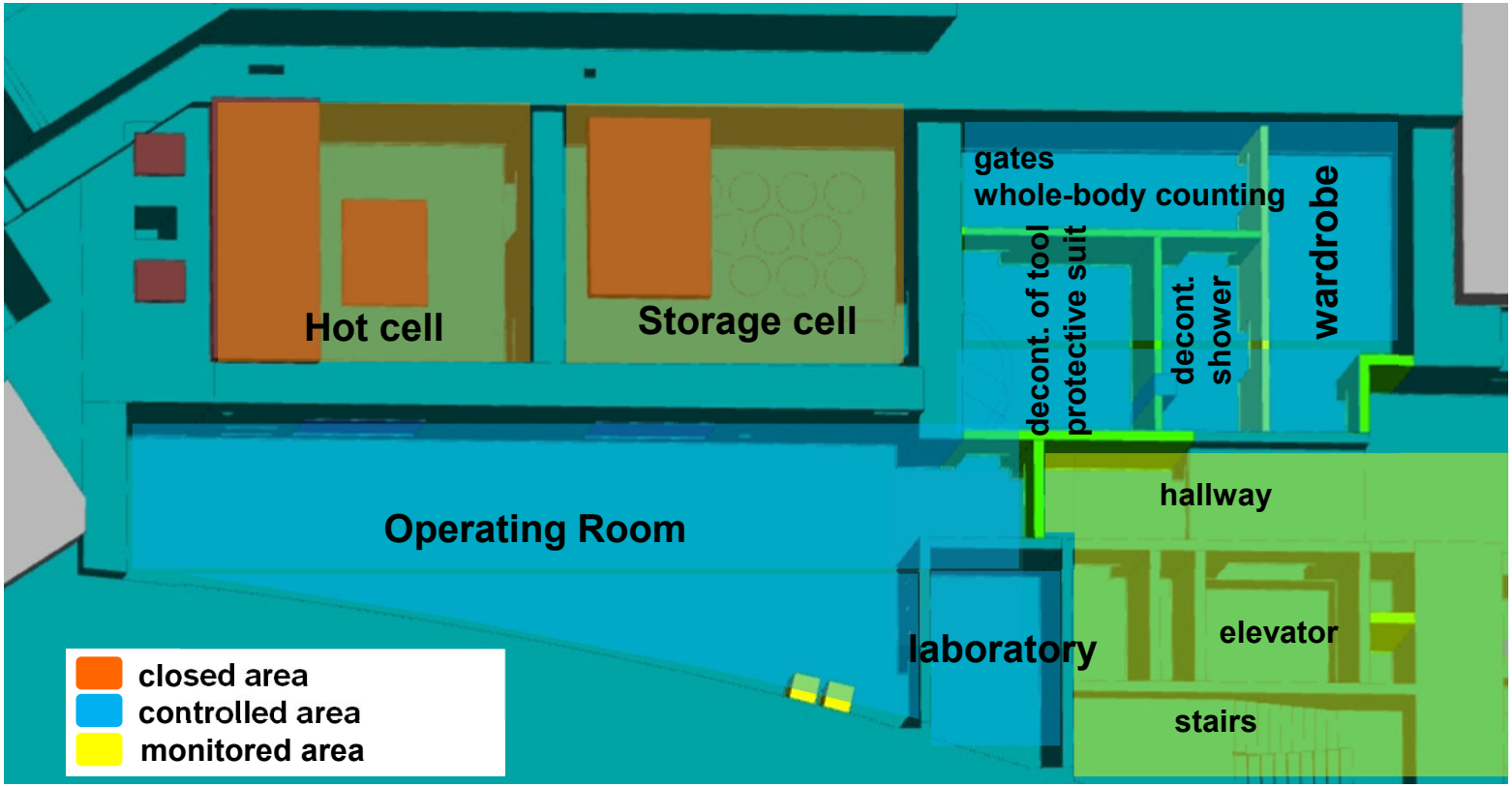

Equipment in Hot Cells

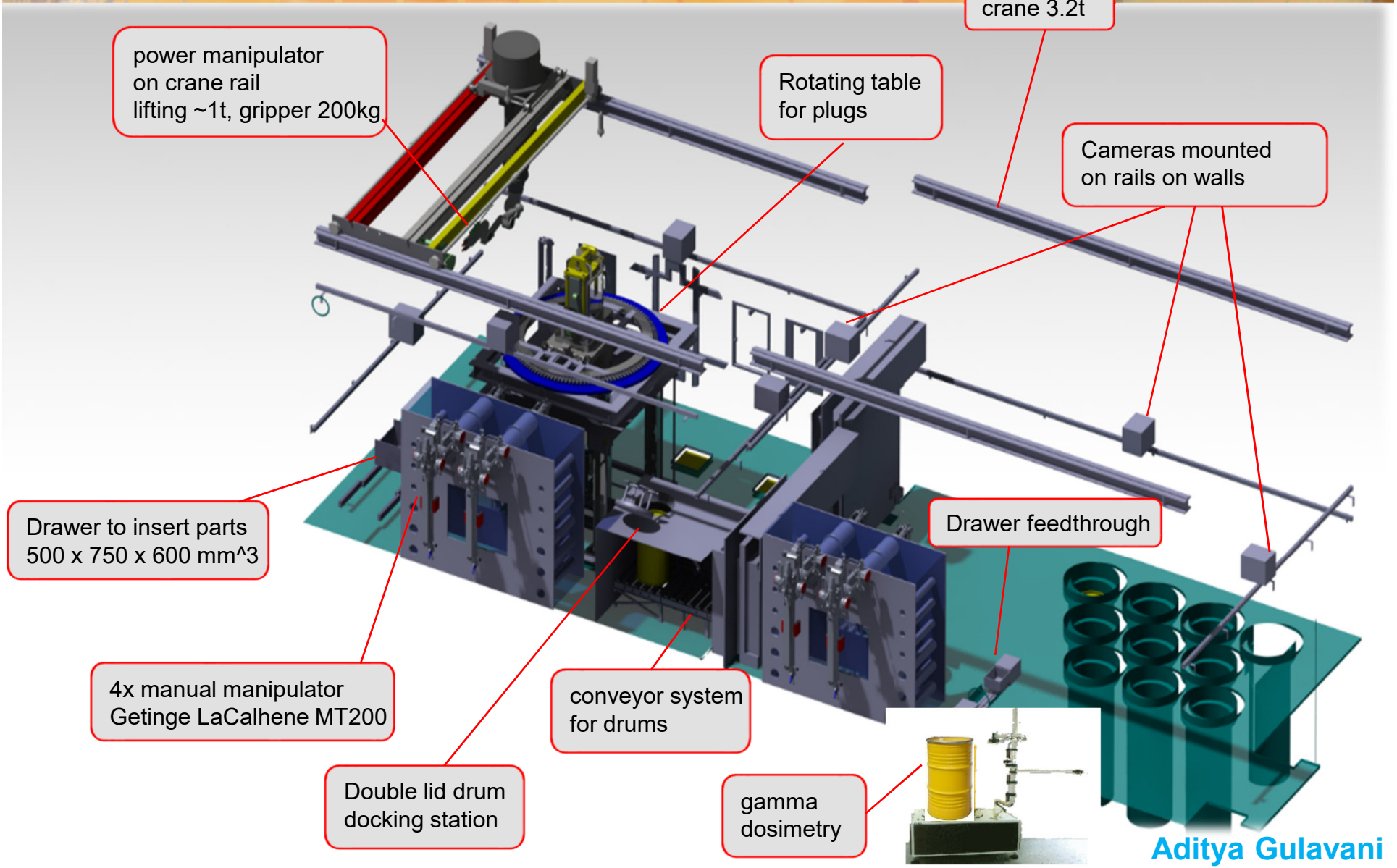

Aditya Gulavani

Rotating Support Table with 3 axis extractor table

Christos Karagiannis

Technical specs:

- Double x axis with a stroke of 400mm and 1200mm
- Motion by means of stepper motors
- Compressed air driven gripping pins
- handled by the power manipulator
- Connections by a remote handled media board

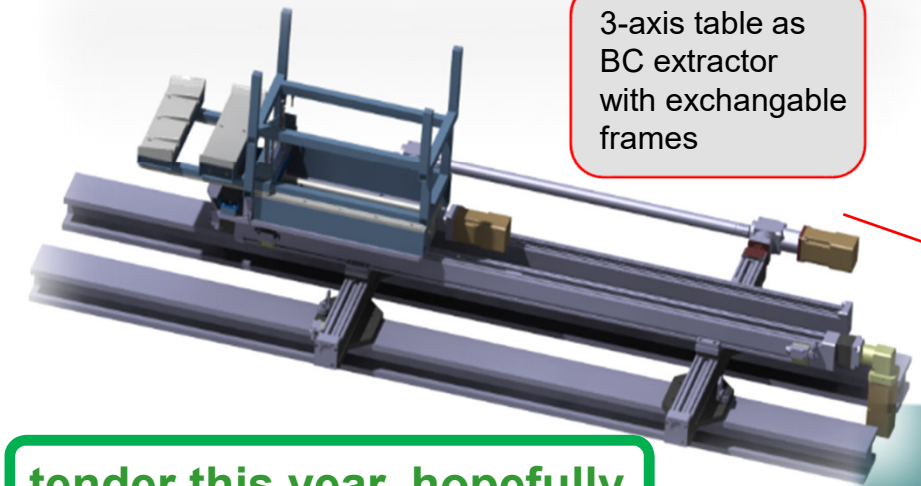

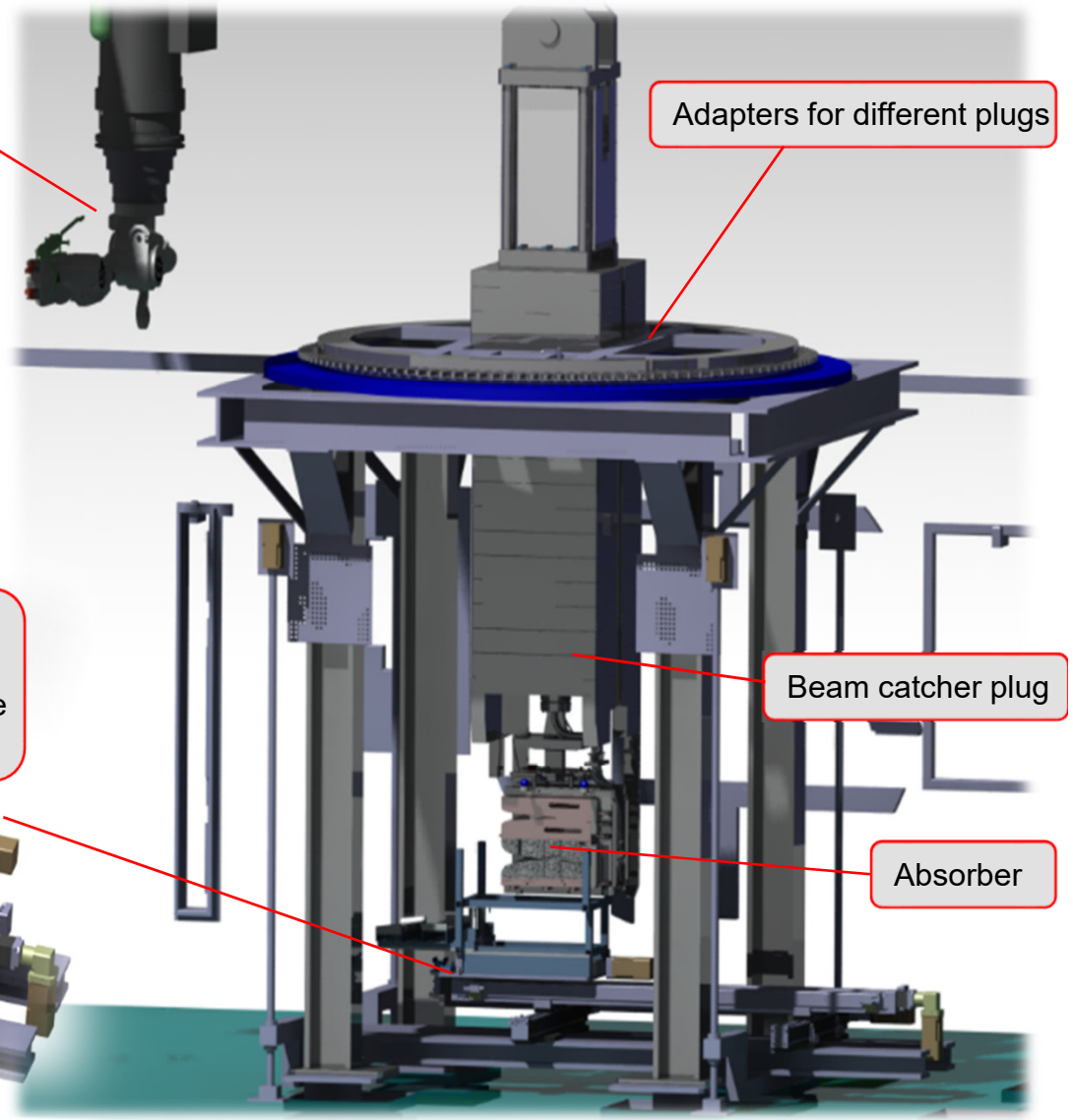

tender this year, hopefully

Maintenance of the absorbers
Testbench

BC3 Dummy

Lifter + BC extractor tool

Christos Karagiannis

Maintenance of the Absorbers Testbench

4 steps to exchange the absorbers

Step1
dismounting the lower C-absorber

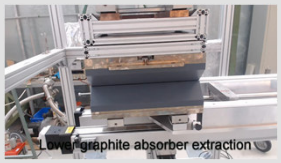

Step2
dismounting the upper C-absorber

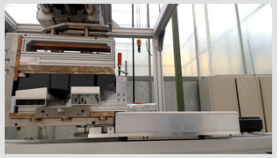

Step3
removal of the absorber C-frame

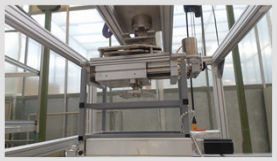

Step4
removal of the linear drive

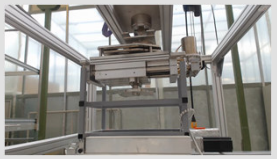

Stepper motor exchange test

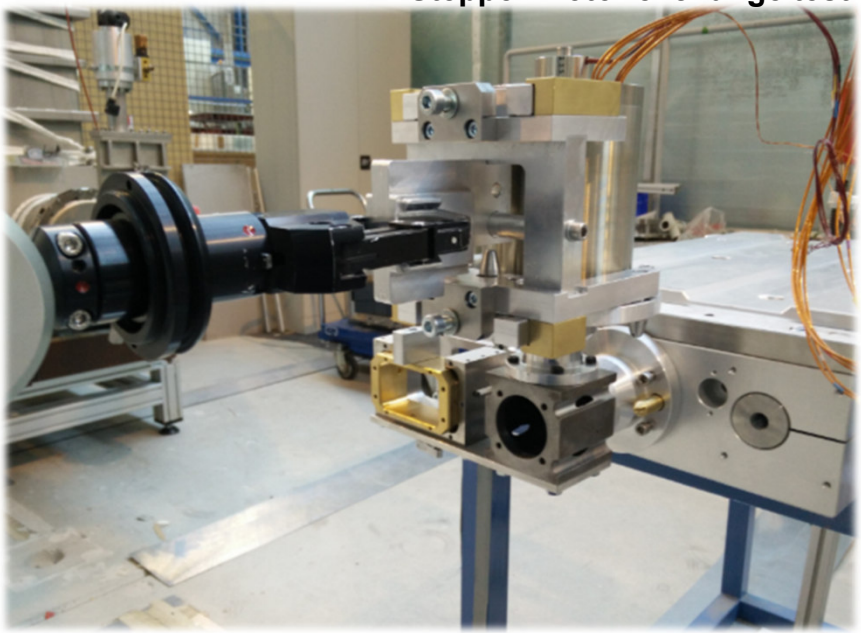

Christos Karagiannis

Pillow Seals

Plug dimensions

Total height: 4m
Width: up to 1760 mm
Depth: 120mm
Weight: up to 2 t

Pillow seals in hot cell

Service: in case of failure
Category: very rare
Measure: clean, replace
Steps: open connections
unhook pillow seal
lift in new pillow seal
reconnect

Too large for drum cutting in hot cell ?
Saw was in original scope

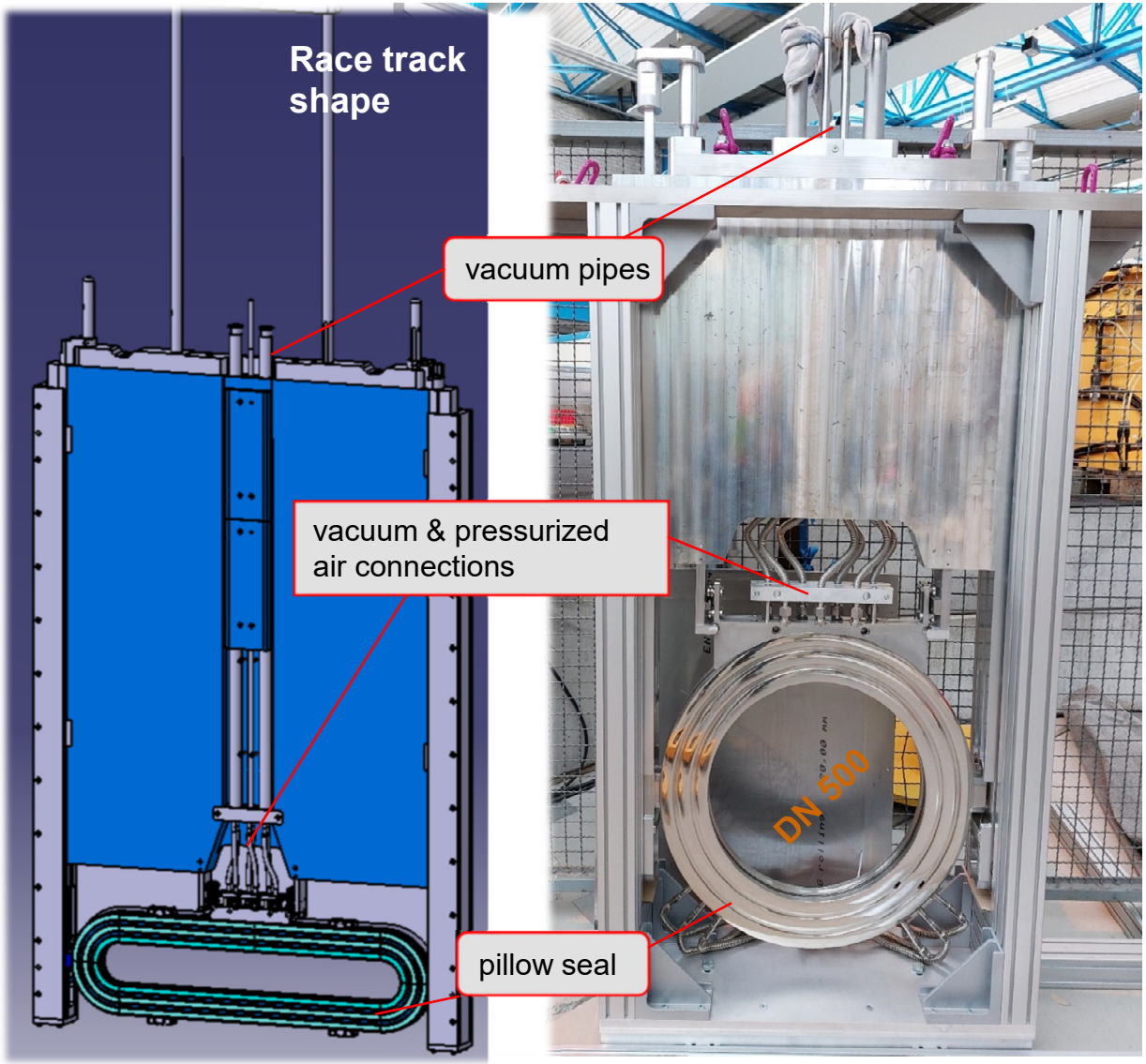

Christos Karagiannis

The End

No, many things to be done