Integration of the hypenuclear detector Setup in the PANDA spectrometer

A. Sanchez Lorente, S. Bleser, M. Steinen,
I. Kojouharov, F. Iazzi, J. Pochodzalla, C. Sfienti

- Short motivation
- Integration in the PANDA spectrometer
- Beam Pipe
- The Secondary Active Target
- The HPGe Array

ΛΛ- Hypernuclei at Panda

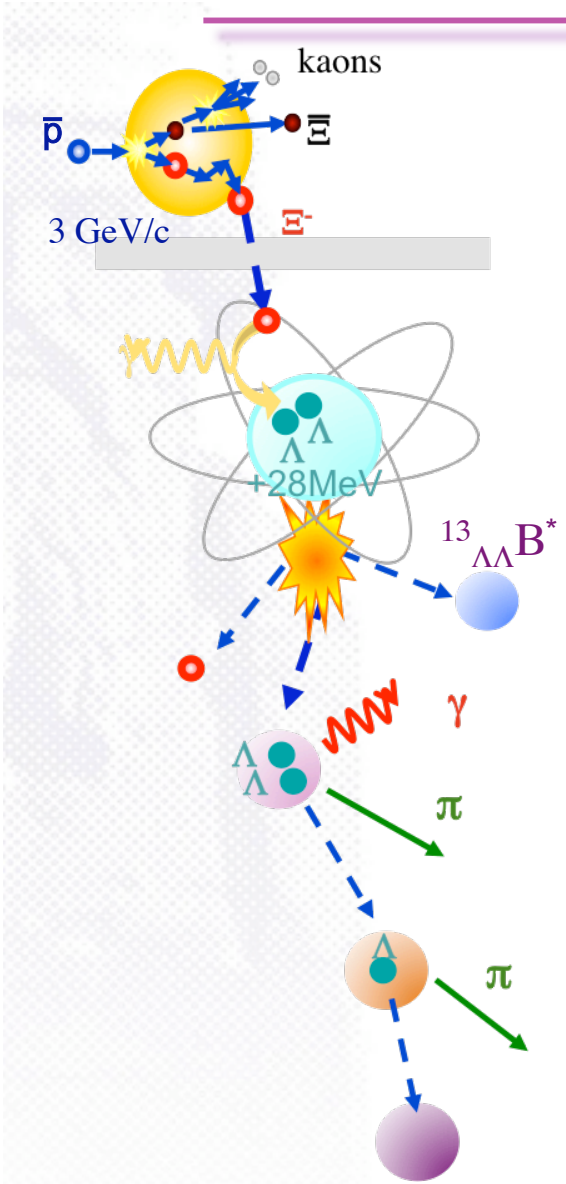

$\bar{p} + {}^{12}C \Rightarrow \Xi^- + \bar{\Xi}$

Array of HPGe

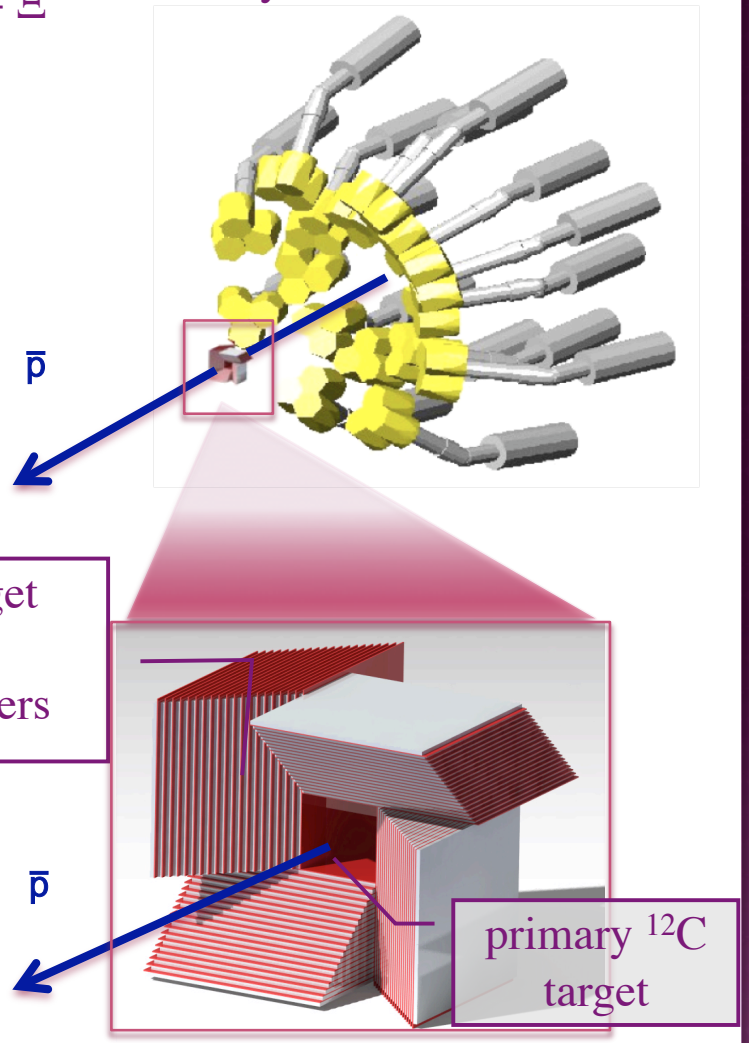

Active secondary target

Integration in the PANDA Spectrometer

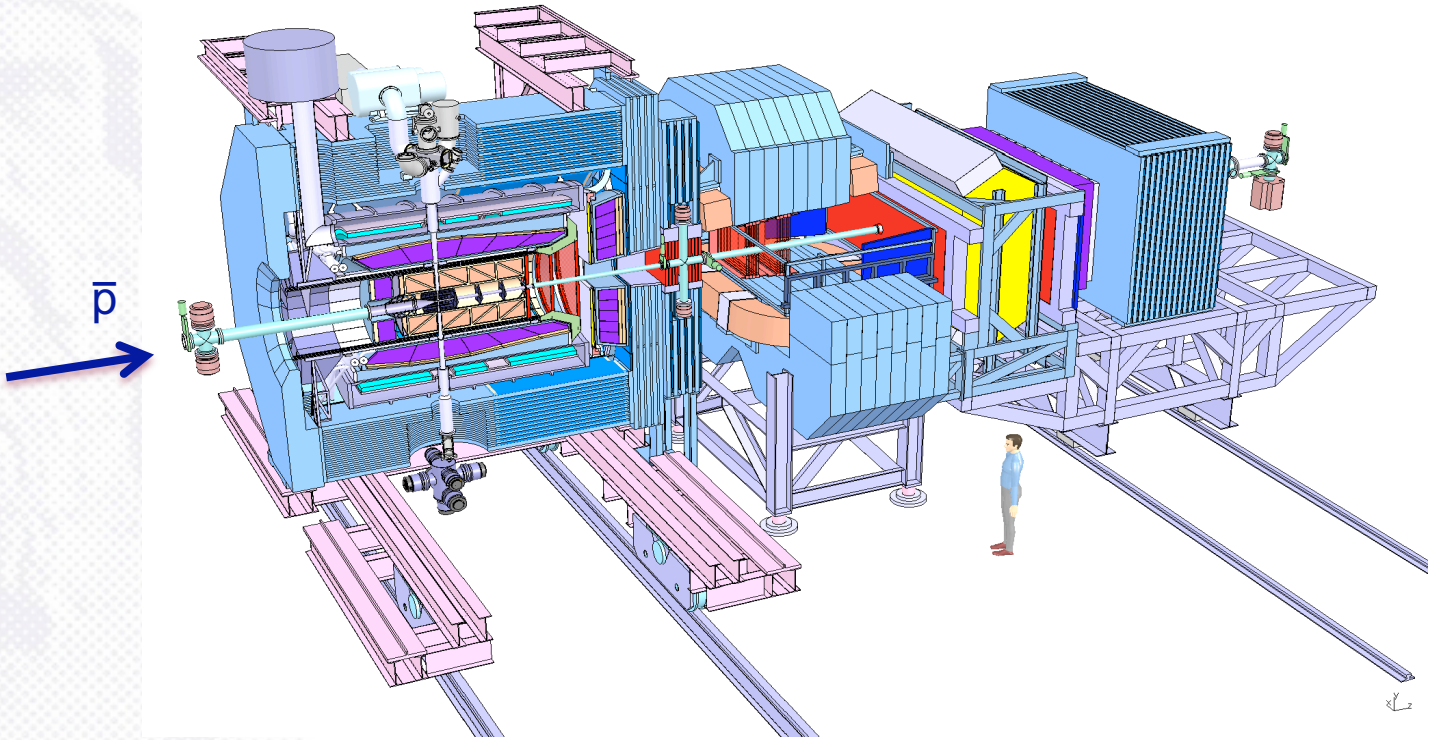

- Limited space inside the target spectrometer but

- Modular structure of PANDA
- Dedicated beam pipe system
- Backward End Cap EMC and MVD will be not used

Dedicated Beam Pipe system

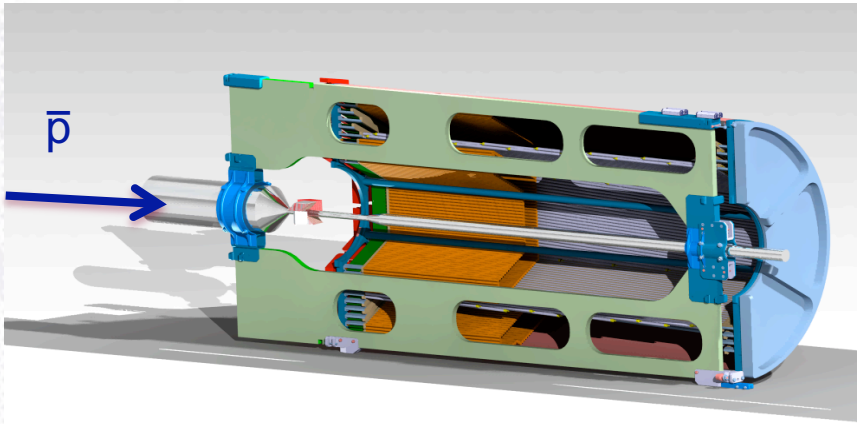

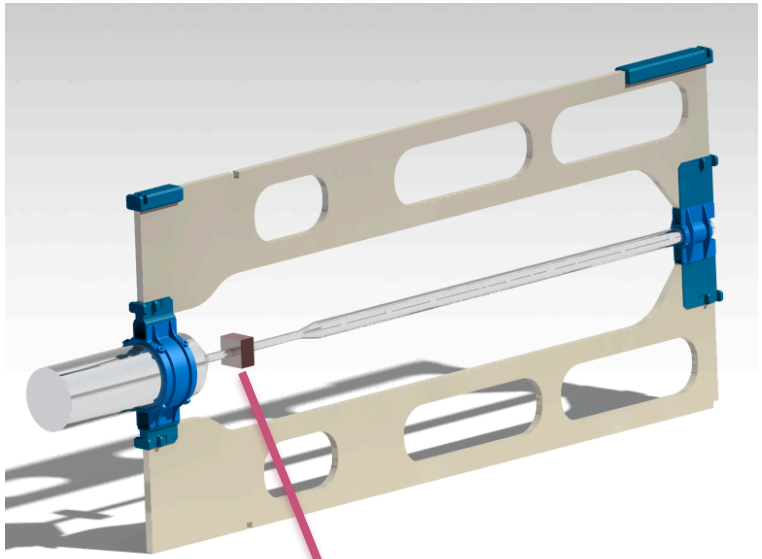

- Interaction Point
  - Primary target (wire /foil ~2um)
  - pipe thickness ~ 100 um (Carbon ?)
- Central Tracker Frame
  - Elongated version (upstream)

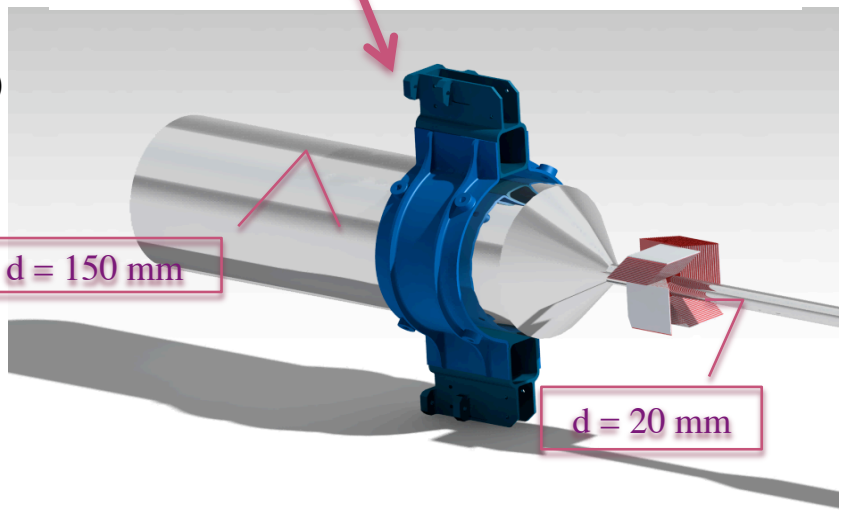

by cortesy of D. Rodriguez

The Secondary Active Target I

- Compact Structure of detector and absorber:

by cortesy of S. Bleser and D. Rodriguez

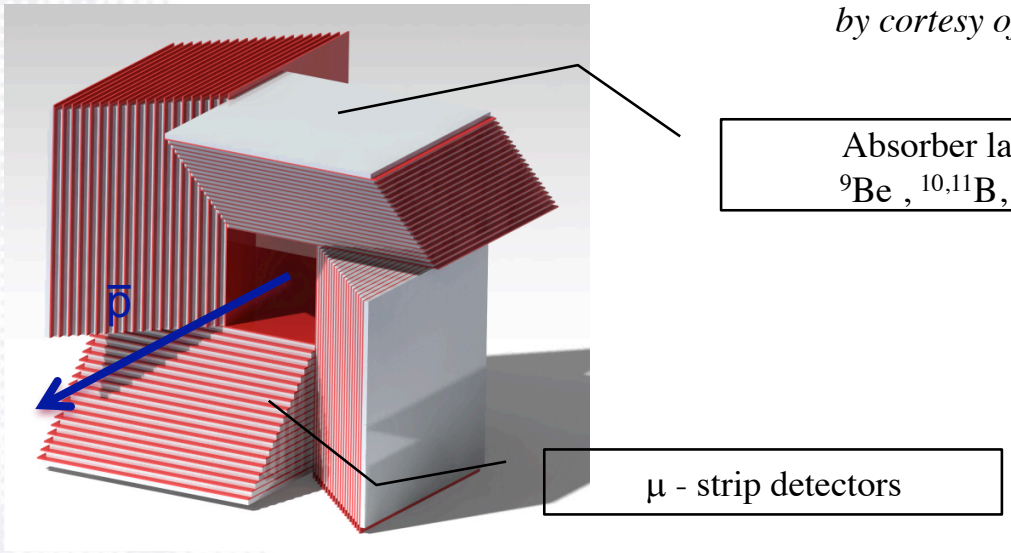

Space required for frontend electronics:

- Minimization of additional material budget on detecting volume:
- Ultra-thin Al-Polyimide readout cables

J.M. Heuser et al. HadronPhysics2/JRA-ULISI

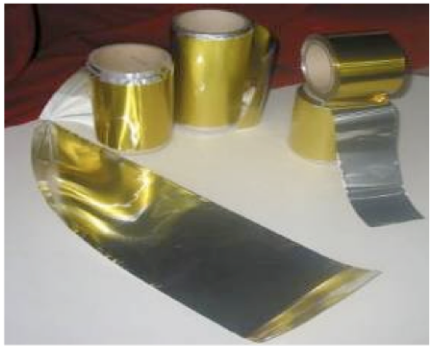

The Secondary Active Target II

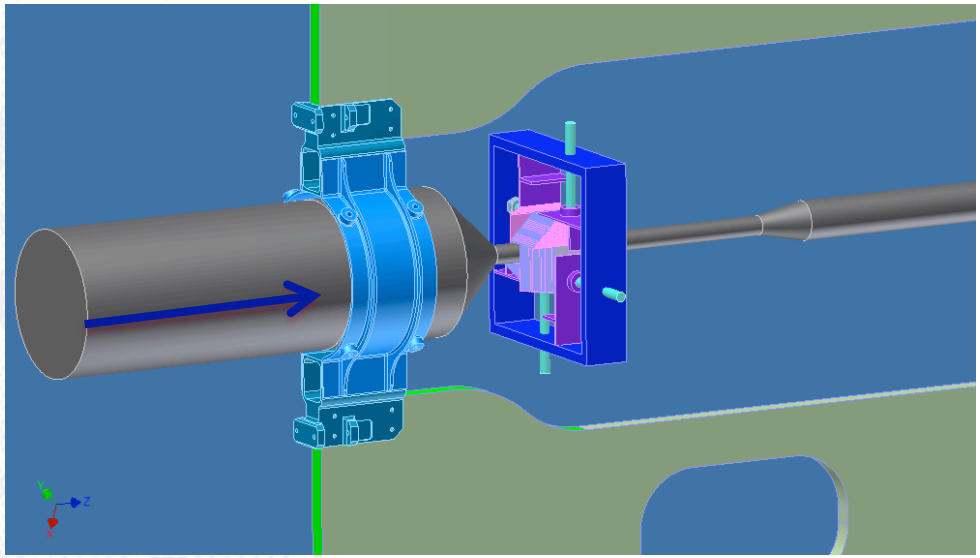

by cortesy of S. Bleser and D. Rodriguez

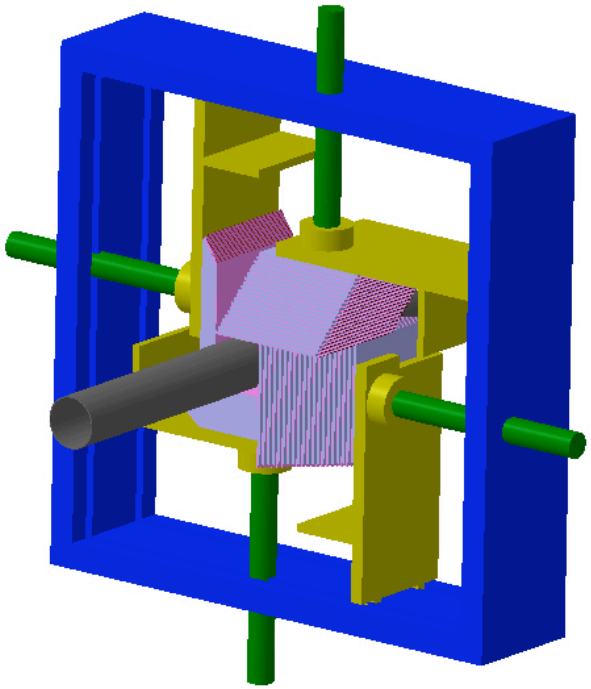

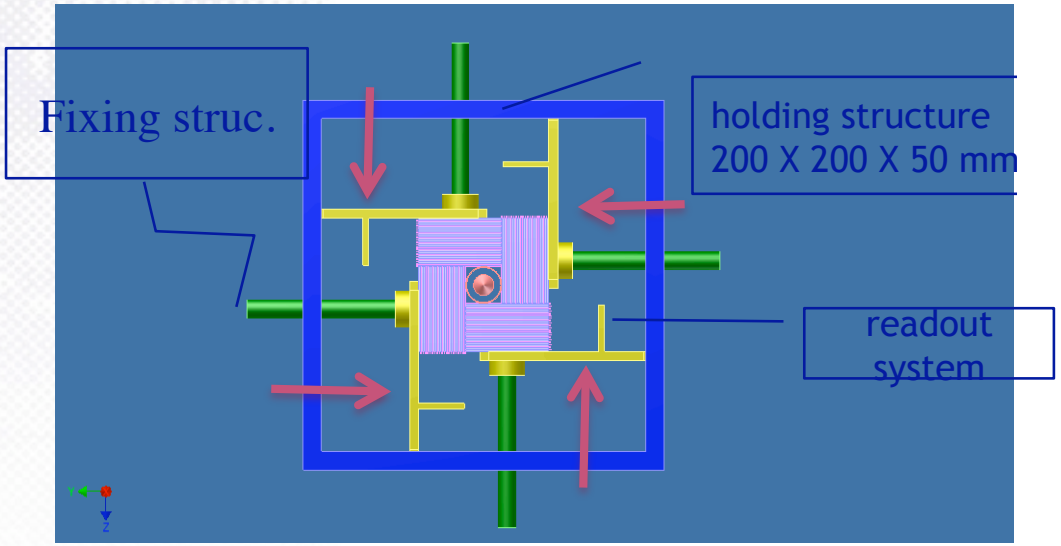

- Preliminar holding frame
  - Stability and construction feasibility has to be tested

The Secondary Active Target III

by cortesy of S. Bleser and D. Rodriguez

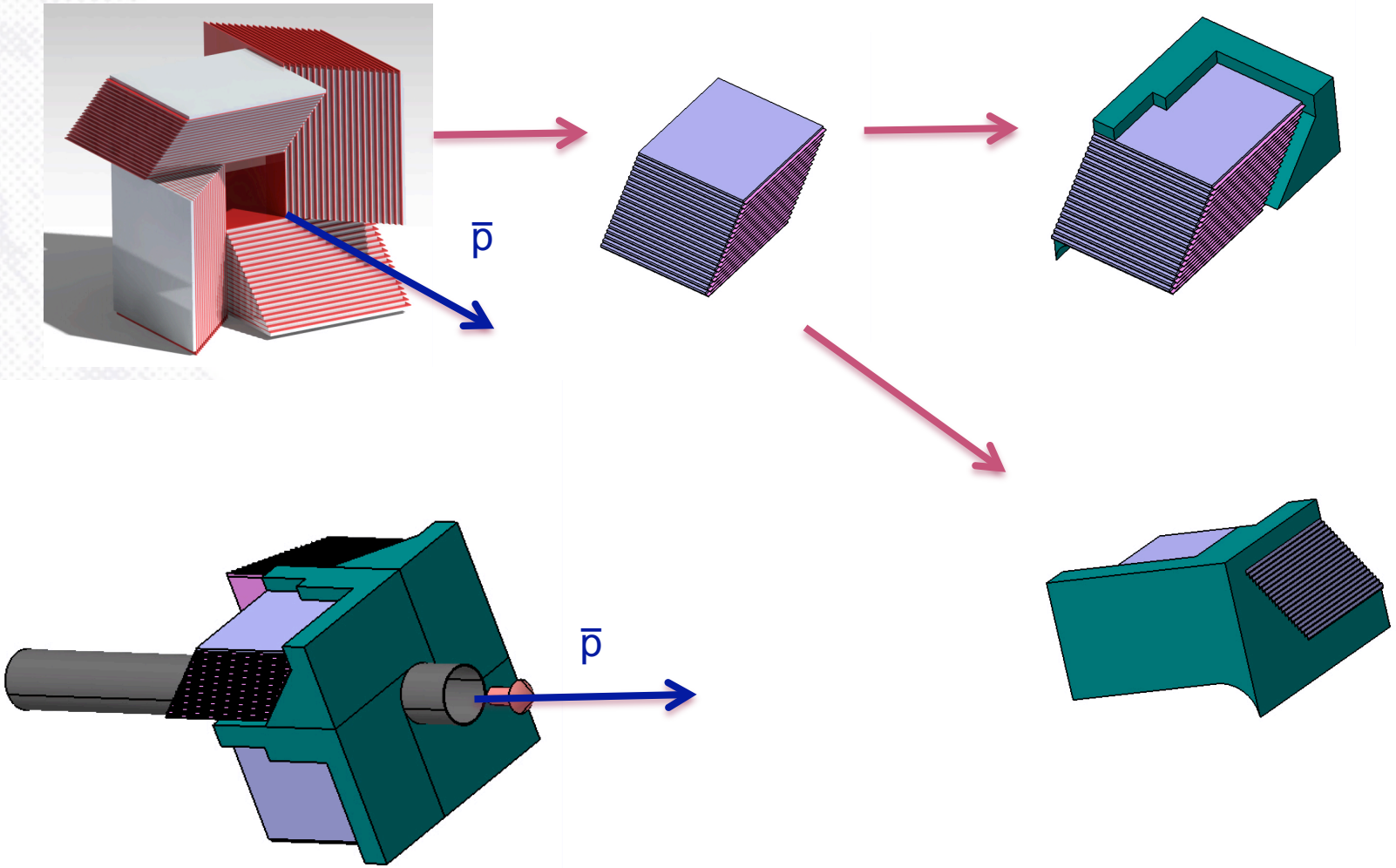

The HPGe Cluster Array

by cortesy of M. Steinen and D. Rodriguez

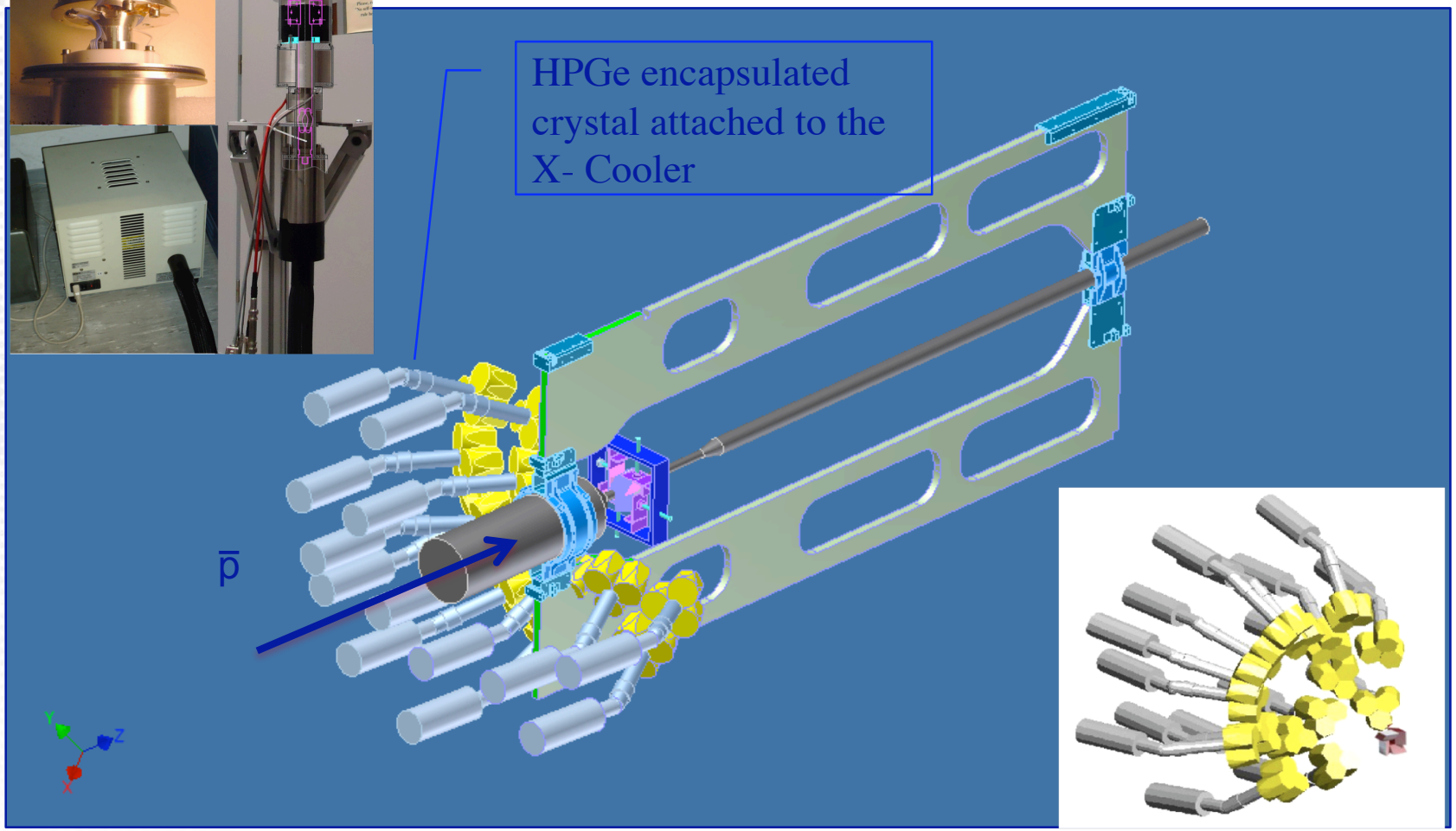

Hypernuclear Detector Setup

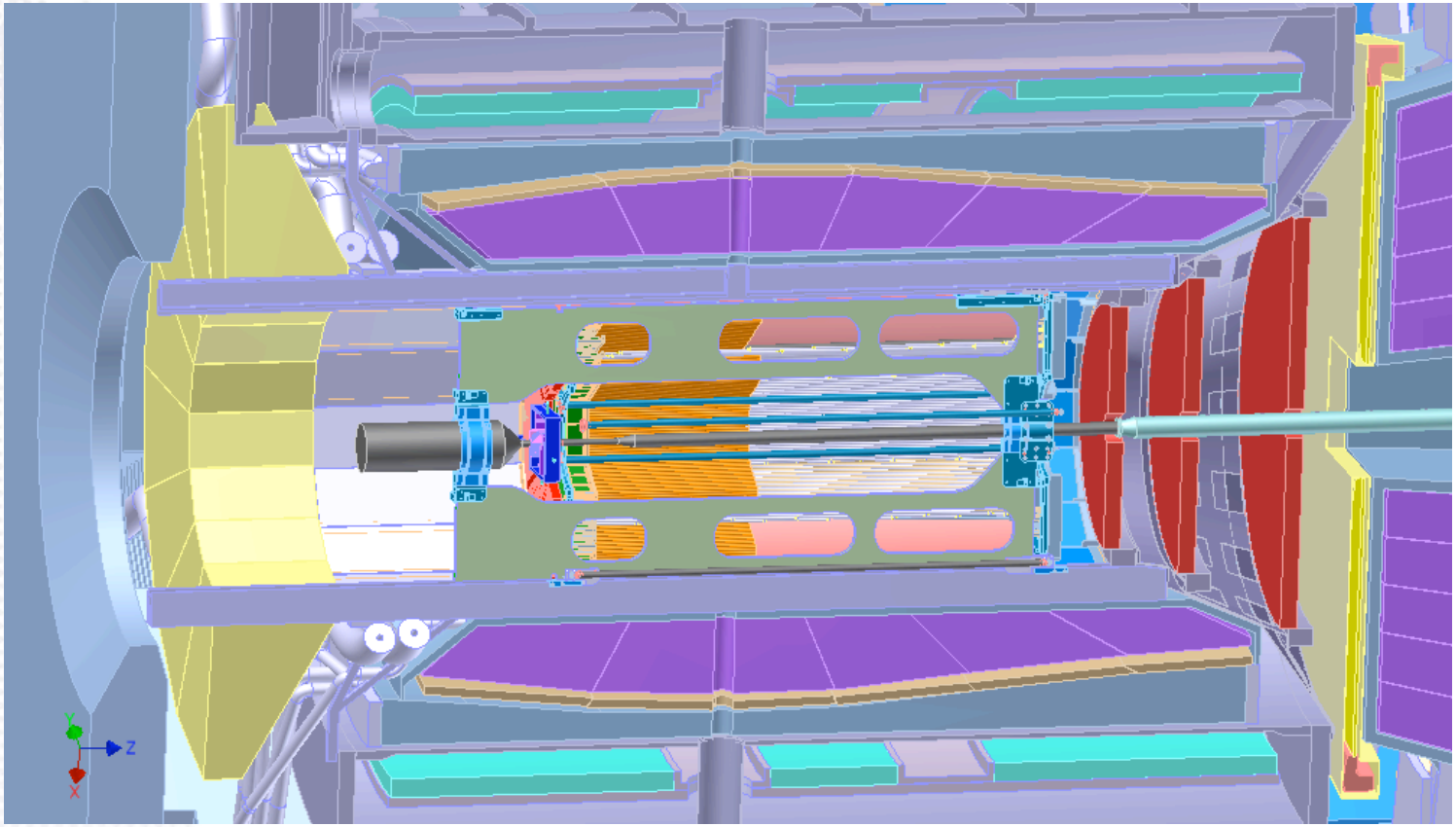

Hypernuclear Session : today afternoon at 16:30 at the Auditorium Side Room