edwardsvacuum.com

VACUUM EQUIPMENT FOR RESEARCH AND DEVELOPMENT

EDWARDS

Dedicated to science

Complete vacuum solutions for laboratory and R&D applications.

At Edwards we have a deep understanding of research processes and the role that vacuum plays at every stage. This experience, coupled with innovative technologies and collaborative engineering, enables us to offer a comprehensive range of vacuum solutions that enhance performance across a broad range of scientific applications.

From the smallest school laboratory, to international R&D projects, our products and application know-how are facilitating educational development and scientific evolution across the globe.

This brochure contains the most common Edwards products used in a typical R&D or laboratory facility. There are many more products available via our product catalogue, website or by contacting your local sales representative.

CONTENTS

04 VACUUM PRODUCTS FOR KEY APPLICATIONS

Vacuum pumps and accessories

42 MEASUREMENT

Pressure measurement and display options

46 COMPONENTS AND HARDWARE

Vacuum components and hardware for configuring your vacuum system

52 SERVICE AND SUPPORT

Cost-effective service and support from the experts

54 REFERENCE GUIDES

Quick reference guides to common conversion factors, outgassing rates, and more

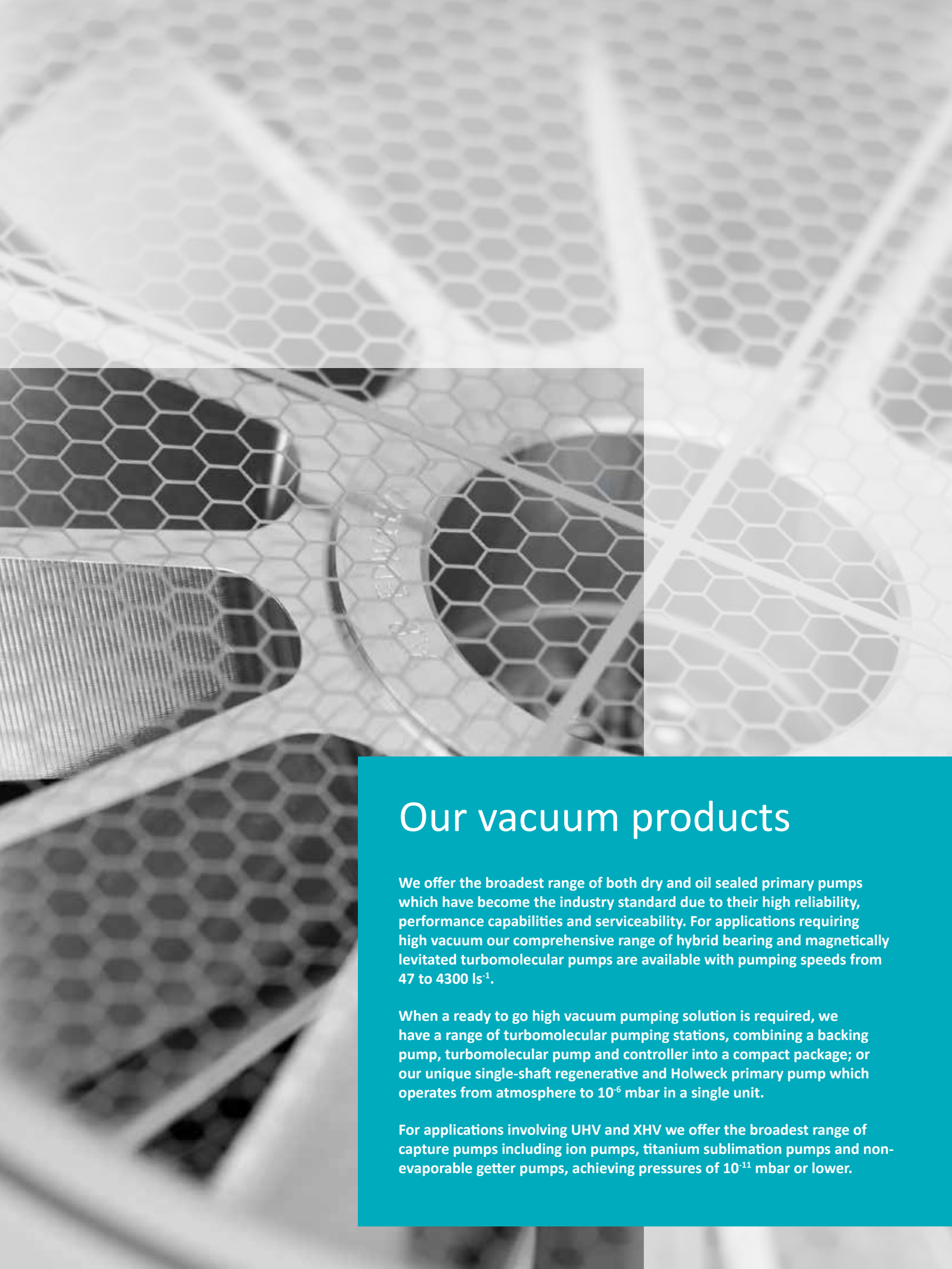

Our vacuum products

We offer the broadest range of both dry and oil sealed primary pumps which have become the industry standard due to their high reliability, performance capabilities and serviceability. For applications requiring high vacuum our comprehensive range of hybrid bearing and magnetically levitated turbomolecular pumps are available with pumping speeds from 47 to 4300 ls^{-1}.

When a ready to go high vacuum pumping solution is required, we have a range of turbomolecular pumping stations, combining a backing pump, turbomolecular pump and controller into a compact package; or our unique single-shaft regenerative and Holweck primary pump which operates from atmosphere to 10^{-6} mbar in a single unit.

For applications involving UHV and XHV we offer the broadest range of capture pumps including ion pumps, titanium sublimation pumps and non-evaporable getter pumps, achieving pressures of 10^{-11} mbar or lower.

Vacuum products for key applications

	nXDS/XDS dry scroll pumps	EM/RV rotary vane pumps	nEXT turbomolecular pumps	Turbomolecular pumping stations	STP magnetically levitated turbomolecular pumps	EPX high vacuum primary pumps	Ion getter pumps	Titanium sublimation pumps	Non-evaporable getter pumps	Measurement and control	Components and hardware
Page number	6	14	22	26	30	34	36	38	39	42	46
APPLICATION											
Backing diffusion pumps	●	●								●	●
Backing turbomolecular pumps	●	●		●		●				●	●
Centrifugal concentration	●	●								●	●
Coating technology	●	●	●	●	●	●				●	●
Distillation and extraction apparatus	●	●								●	●
Electron microscopes	●	●	●	●	●		●		●	●	●
Freeze dryers	●	●								●	●
Fume hoods and glove boxes	●	●								●	●
Gas recovery and recirculation	●	●	●	●	●					●	●
Gel dryers	●	●								●	●
High energy physics	●	●	●	●	●	●	●	●	●	●	●
Initial pump down and regeneration of cryopumps	●	●	●	●	●	●				●	●
Lasers	●	●	●	●	●	●	●			●	●
Leak detectors	●	●	●	●						●	●
Load locks	●	●		●		●				●	●
Mass spectrometers	●	●	●	●	●		●			●	●
Mass spectrometry inlet systems	●	●								●	●
Molecular beam epitaxy	●	●	●	●	●	●	●		●	●	●
Particle size analysers	●	●	●							●	●
Refrigeration and air conditioning	●	●								●	●
Rotary evaporation	●	●								●	●
Sample preparation	●	●								●	●
Surface science	●	●	●	●	●	●	●	●	●	●	●
UHV and XHV systems	●	●	●	●	●	●	●	●	●	●	●
Ultra high-speed centrifuges	●	●								●	●
Vacuum filtration	●	●								●	●
Vacuum ovens	●	●								●	●

nXDS DRY SCROLL PUMPS

With exceptional pumping capability, ultimate vacuum performance and state-of-the-art design features, the nXDS dry scroll pump is the best performing pump in its class.

nXDS improves on other scroll pumps by offering increased pumping speeds, combined with lower ultimate pressures, low power consumption and reduced noise. The gas ballast allows for pumping of condensable vapours, including water, solvents, dilute acids and bases. nXDS pumps feature the very latest in tip seal technology, giving a significantly longer life between tip seal changes.

nXDS-C has been modified so that it is more suitable for use on vapour handling processes and may be used in some applications involving corrosive substances. This chemically resistant version is fitted with Chemraz® internal valve pads and stainless steel fittings. nXDS-R has the gas ballast blanked off so it cannot be accidentally opened. This is useful for applications such as rare gas recirculation or gas recovery.

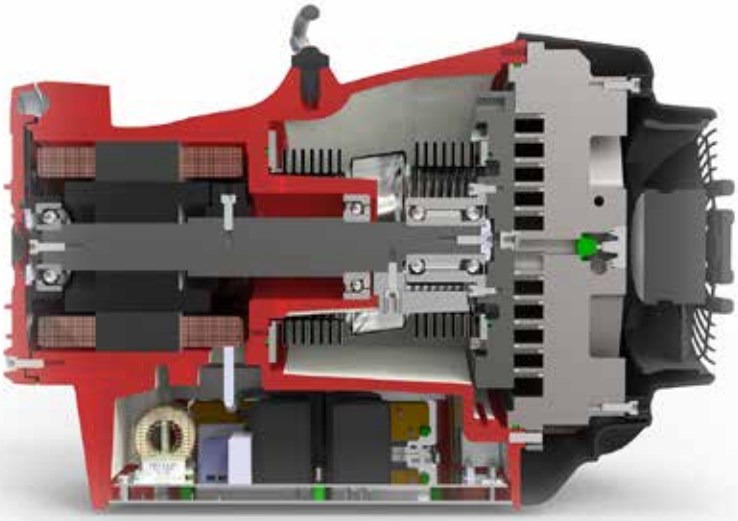

PRODUCT FEATURES

TEMPERATURE CONTROLLED FAN

allows reduced fan speed under low load conditions for reduced acoustic noise from only 52 dB(A).

BEARING SHIELD

ensures separation between process gases and bearing lubrication to ensure clean vacuum and no possibility of contamination to lubrication from process gases, which prolongs bearing life.

INVERTER DRIVE

means consistent performance globally, ease of control, lower power consumption and automatic voltage adjustment delivering the ultimate in user experience.

ENHANCEMENTS IN SCROLL DESIGN

deliver higher speeds and a decade lower ultimate pressures than first generation scroll pumps with ultimate from only 7×10^{-3} mbar

IMPROVED TIP SEAL TECHNOLOGY

delivers a step change in life, with a typical tip seal life of more than 2 years on most applications.

HIGH FLOW GAS BALLAST FEATURE

allows pumping of vapours including water vapour at up to 220 gh^{-1}.

Chemraz® is a registered trademark of Greene Tweed

Technical data

	Units	nXDS6i	nXDS10i	nXDS15i	nXDS20i
VACUUM DATA					
Peak pumping speed	m^3h^{-1} (cfm)	6.2 (3.6)	11.4 (6.7)	15.1 (8.9)	22.0 (13.0)
Ultimate vacuum [1]	mbar (Torr)	0.02 (0.015)	0.007 (0.005)		0.03 (0.022)
Ultimate vacuum with gas ballast	mbar (Torr)	0.05 (0.038)	0.04 (0.03)		0.06 (0.045)
Water vapour tolerance	mbar (Torr)	35 (26)			20 (15)
Water vapour handling capacity	gh^{-1}	110	145		220
Maximum continuous inlet pressure [2]	mbar a (Torr a)	200 (150)			50 (38)
Maximum gas ballast/purge pressure	bar gauge (psig)	0.5 (7)			
MOTOR DATA					
Supply voltage	V	100-127/200-240 (+/-10%)			
Supply frequency	Hz	50/60			
Nominal rotational speed	rpm	1800			
Minimum standby rotational speed	rpm	1200			
Speed control resolution	%	1			
Power at ultimate	W	260	280	300	260
Motor power	W	660			
Power connector		IEC EN60320 C13			
Recommended fuse, 230 V (115 V)	A	10 (13)			
PHYSICAL DATA					
Weight	kg (lb)	26.2 (58)	25.8 (57)	25.2 (56)	25.6 (56)
Inlet connection		NW25			
Exhaust connection		NW25			
Noise level at ultimate	dB(A)	52			
Noise level with acoustic enclosure	dB(A)	47			
Vibration at inlet flange	mms^{-1} (rms)	< 4.5			
Leak tightness (static)	mbar ls^{-1}	$< 1 \times 10^{-6}$			
Operating temperature range	°C (°F)	10 to 40 (50 to 104)			

(1) Measured as total pressure.
(2) These pumps are designed to pump down from atmospheric pressure, but prolonged operation at inlet pressures higher than specified may reduce bearing life.

Dimensions

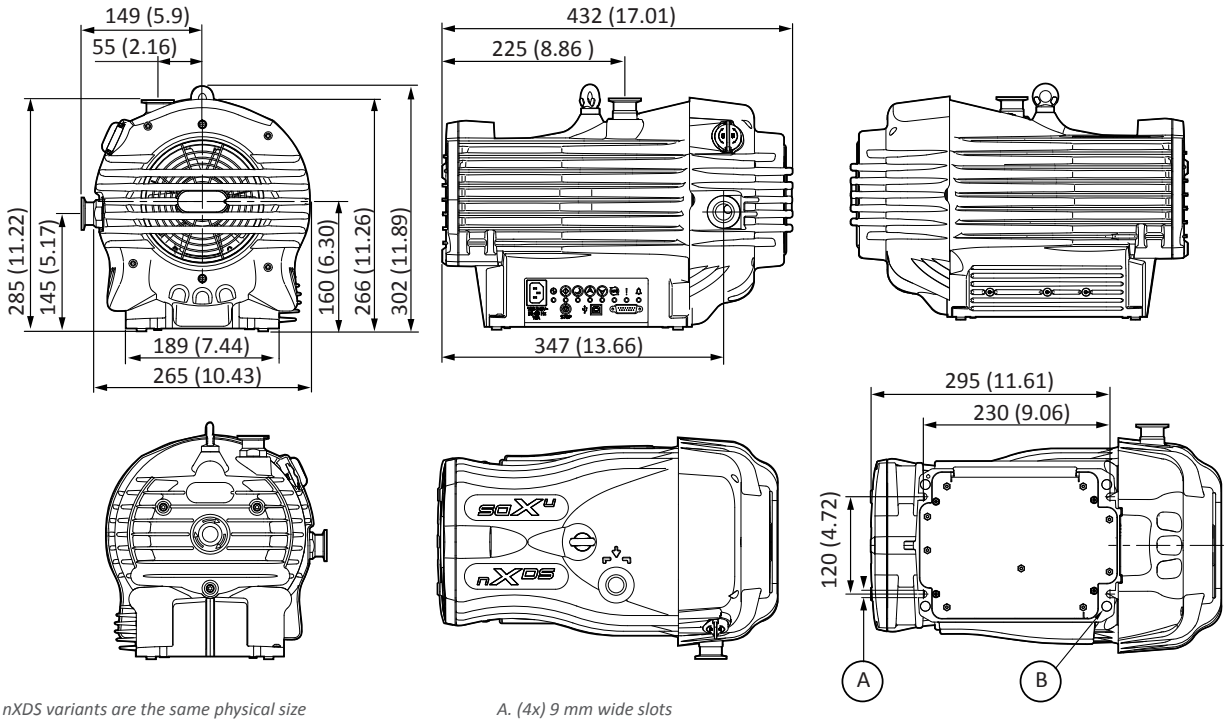

All nXDS variants are the same physical size
Dimensions in millimetres (inches)

A. (4x) 9 mm wide slots
B. (4x) Rubber feet

Performance

nXDS6i

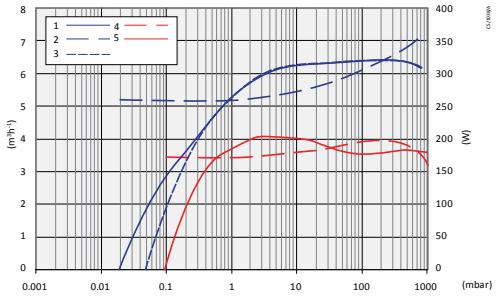

nXDS10i

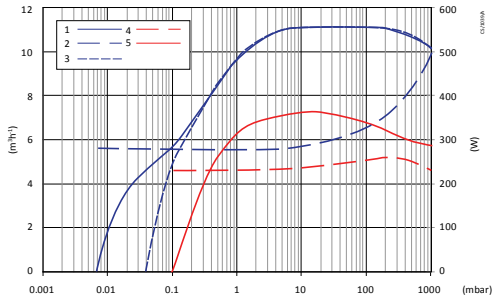

nXDS15i

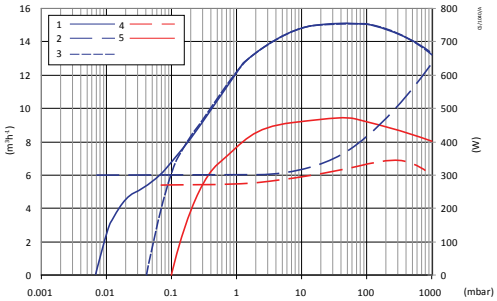

nXDS20i

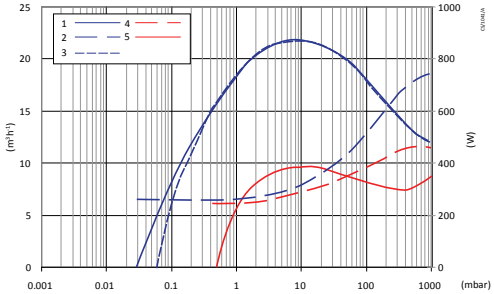

1. Normal pumping speed
2. Normal full power
3. Normal GB speed
4. Min standby power
5. Min standby speed

Ordering information

Pumps:

Product description		Order no.
Standard product	nXDS6i	A73501983
	nXDS10i	A73601983
	nXDS15i	A73701983
	nXDS20i	A73801983
Corrosion resistant variants (C)	nXDS6iC	A73502983
	nXDS10iC	A73602983
	nXDS15iC	A73702983
	nXDS20iC	A73802983
Variants without gas ballast (R)	nXDS6iR	A73503983
	nXDS10iR	A73603983
	nXDS15iR	A73703983
	nXDS20iR	A73803983

Extended warranty:

Product	2 year extended warranty	3 year extended warranty
nXDS6i	EW2AA5001	EW3AA5001
nXDS10i	EW2AA5002	EW3AA5002
nXDS15i	EW2AA5003	EW3AA5003
nXDS20i	EW2AA5004	EW3AA5004

Accessories and spares:

Product description		Order no.
Accessories	TIC (Turbo) 200 W	D39712000
	TIC (Turbo and Instruments) 200 W	D39722000
	Inlet/exhaust filter NW25	A50597805
	Gas ballast adaptor blank	A73501806
	Gas ballast adaptor with 0.25 mm restrictor	A73501809
	Gas ballast adaptor with no restrictor	A73501811
	Silencer NW25	A50597000
	Vibration isolators (pack of 4)	A24801441
	Acoustic enclosure 110-120 V	NRY5C0000
	Acoustic enclosure 200-240 V	NRD797000
Spares	Tip seal kit	A73501801
	Bearing replacement kit (1)	A73501802
	Exhaust and ballast valve kit (standard and R version)	A73501803
	Exhaust and ballast valve kit (C version only)	A73501804
	Chemical adaptor kit for nXDS6i, 10i or 15i	A73501807
	Chemical adaptor kit for nXDS20i	A73501808
	Inlet/exhaust filter spares - 5 micron element	A50597802
	Inlet/exhaust filter spares - 1 micron element	A50597803
	Silencer spares kit	A50597800
	Cooling fan	A73501707
	Gas ballast control knob	A73501059
Cord sets	UK, three pin plug	A50505000
	North European plug	A50506000
	North American plug	A50507000
	No plug	A50508000

(1) Tooling and training required.

nXDS with common accessories

XDS DRY SCROLL PUMPS

XDS dry scroll pumps have become industry standard when dry pumping is essential, proving to be a robust and clean vacuum pump solution in a range of applications and processes.

The XDS35i pump has an innovative bearing shield that isolates the vacuum environment from all forms of lubricant, making it not only lubricant-free but hermetically sealed. XDS35iNGB variant has had the gas ballast feature removed for applications such as rare gas recirculation and gas recovery.

The C variant has been modified so that it is more suitable for use on vapour handling processes and may be used in some applications using corrosive substances. The C version is fitted with Chemraz® internal valve pads and stainless steel exhaust port.

The XDS46i shares many of the same features of the XDS35i but with a peak speed of 40 m^3h^{-1}. The pump has been optimised for maximum pumping speed at inlet pressures between 1 mbar and 10 mbar, making it ideally suited for backing turbomolecular pumps.

PRODUCT FEATURES

BEARING SHIELD

ensures separation between process gases and bearing lubrication to ensure clean vacuum and no possibility of contamination to lubrication from process gases, which prolongs bearing life.

INVERTER DRIVE

means consistent performance globally, pump overload protection and remote start/stop capability.

HIGH FLOW GAS BALLAST FEATURE

allows pumping of vapours including water vapour at up to 240 gh^{-1}.

UNIQUE AXIAL AIR GAP MOTOR

reduces overall pump size and gives low power and noise.

SIMPLE SINGLE SIDED SCROLL DESIGN

allows maintenance to be done in minutes for low cost of ownership and maximum up-time.

Chemraz® is a registered trademark of Greene Tweed

Technical data

	Units	XDS35i	XDS46i
VACUUM DATA			
Peak pumping speed	m^3h^{-1} (cfm)	35 (21)	40 (23.5)
Ultimate vacuum (1)	mbar (Torr)	0.01 (0.008)	0.05 (0.04)
Ultimate vacuum with gas ballast 1	mbar (Torr)	0.02 (0.015)	0.08 (0.06)
Ultimate vacuum with gas ballast 2	mbar (Torr)	10 (7.5)	
Water vapour tolerance	mbar (Torr)	35 (23)	40 (30)
Water vapour handling capacity	gh^{-1}	240	
Maximum continuous inlet pressure (2)	mbar a (Torr a)	40 (30)	
Maximum gas ballast/purge pressure	bar gauge (psig)	0.5 (7)	
MOTOR DATA			
Supply voltage	V	100-120/200-240 (+/- 10%)	
Supply frequency	Hz	50/60	
Nominal rotation speed	rpm	1750	
Power at ultimate	W	440	380
Motor power	W	520	
Power connector		IEC EN60320 C19	
Recommended fuse, 230 V (115 V)	A	16 (3) (20)	
PHYSICAL DATA			
Weight	kg (lb)	48 (105)	
Inlet connection		NW40	
Exhaust connection		NW25	
Noise level at ultimate	dB(A)	57	55.4
Noise level with acoustic enclosure	dB(A)	48	46.4
Vibration at inlet flange	mms^{-1} (rms)	< 4.5	
Leak tightness (static)	mbar ls^{-1}	$< 1 \times 10^{-6}$	
Operating temperature range	°C (°F)	10 to 40 (50 to 104)	

(1) measured as total pressure
(2) These pumps are designed to pump down from atmospheric pressure, but prolonged operation at inlet pressures higher than specified may reduce bearing life.
(3) for UK 240 V use 13 A fuse

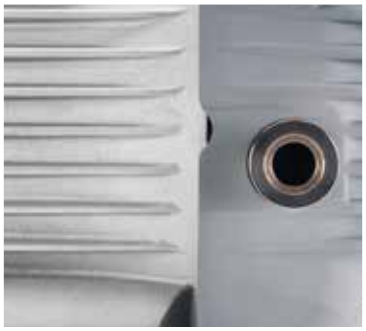

Dimensions

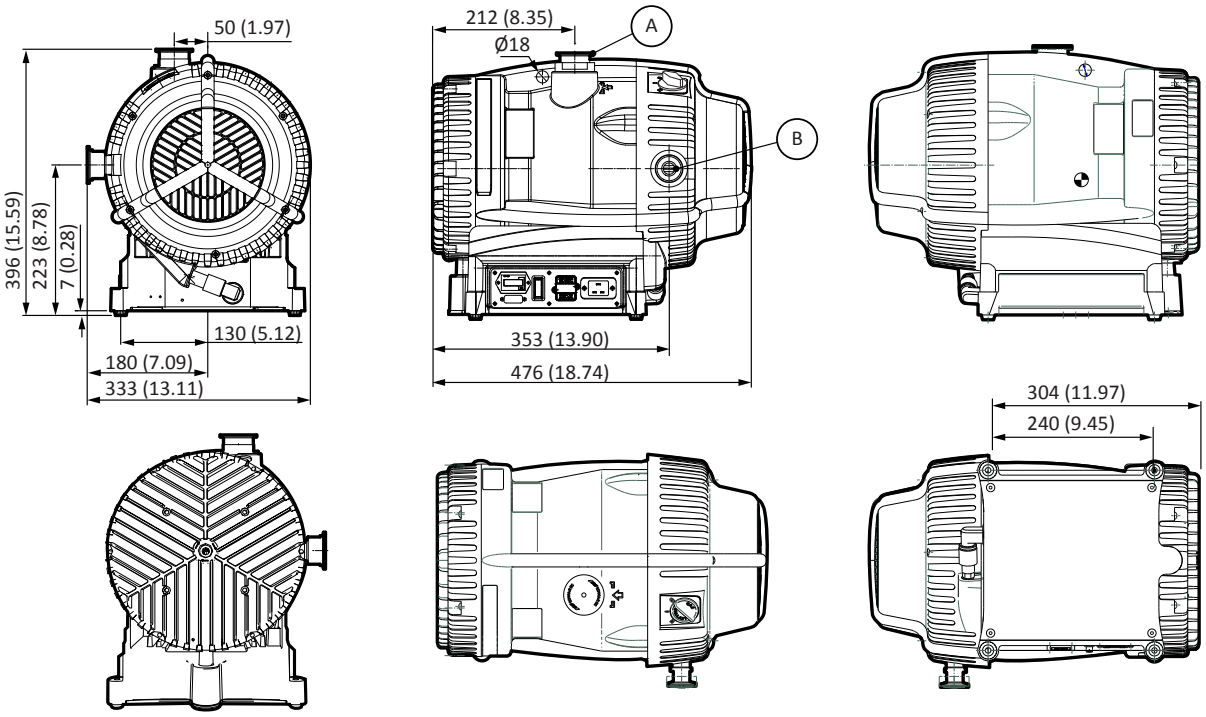

A. NW40
B. NW25

Performance

XDS35i

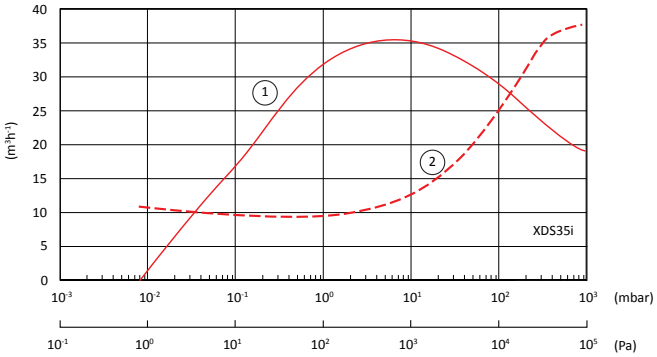

XDS46i

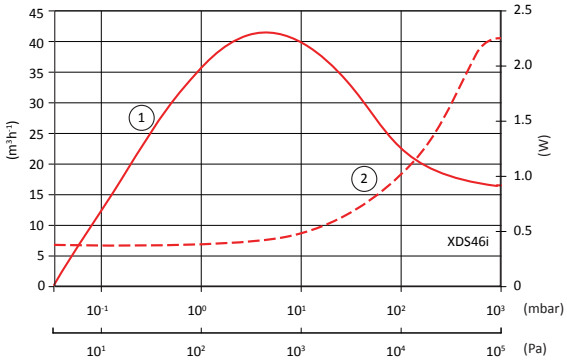

1. Speed
2. Power

Ordering information

Pumps:

Product description		Order no.
Standard product	XDS35i	A73001983
	XDS46i	A73101983
Corrosion resistant variants (C)	XDS35iC	A73006983
	XDS46iC	A73106983
Variants without gas ballast (NGB)	XDS35i-NGB	A73005983

Extended warranty:

Product	2 year extension	3 year extension
XDS35i	EW2AA5005	EW3AA5005
XDS46i	EW2AA5006	EW3AA5006

Accessories and spares:

Product description		Order no.
Accessories	Exhaust silencer XDS35i	A50597001
	Gas ballast adapter with 0.25 mm restrictor	A50626801
	Gas ballast adaptor with no restrictor	A50502000
	Vibration isolator (pack of 4)	A24801408
	Inlet/exhaust filter NW25	A50597805
	Inlet/exhaust filter NW40	A50597806
	XDS acoustic enclosure 110-120 V	NRY5C0000
	XDS acoustic enclosure 200-240 V	NRD797000
Spares	Tip-seal kit XDS35i	A73001801
	Tip-seal kit XDS46i	A73101801
	Silencer spares kit	A50597801
	XDS filter 5 micron element kit	A50597802
	XDS filter 1 micron element kit	A50597803
Cord sets	UK, three pin plug	A50505003
	North European plug	A50506003
	North America/Japan plug	A50507003
	No plug	A50508003

EM OIL SEALED ROTARY VANE PUMPS

EM single and two stage oil sealed rotary vane pumps are renowned for achieving high ultimate vacuum and rapid pumping speeds, with quiet operation and compact size. These pumps have been proven to provide long term reliable performance over many years in a range of scientific and laboratory applications, and are the ideal partner for your turbomolecular pump.

PRODUCT FEATURES

HIGH QUALITY OILS

with additives to prolong life whilst not impacting vapour pressure.

LARGE WATER VAPOUR HANDLING CAPACITY

gas ballast valve.

NO CUSTOMER WIRING

integral IEC connector.

VISUAL INSPECTION OF OIL LEVEL AND CONDITION

O ring sealed sight glass.

LOW SURFACE TEMPERATURE

forced air cooling.

WIDE VOLTAGE MOTORS

all major countries covered with less variants.

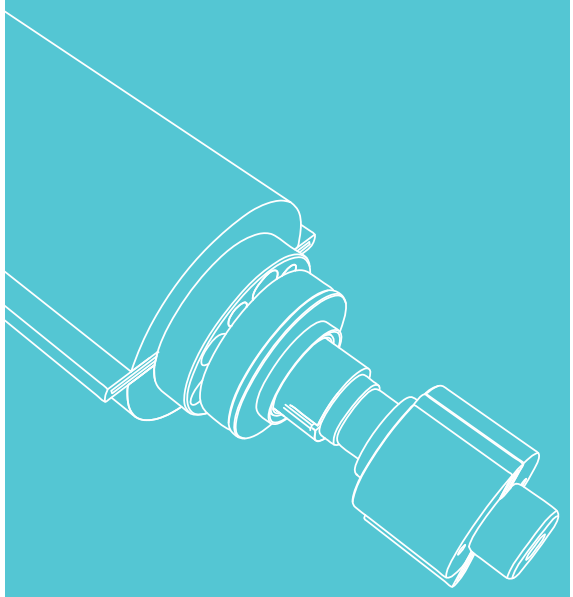

Technical data

	Units	E2M0.7	E2M1.5	E1M18	E2M18	E2M28
MOTOR DATA						
Peak pumping speed, 50 Hz (60 Hz)	m^3h^{-1} (cfm)	0.75 (0.5)	1.6 (1.2)	17 (12.1)	17 (12.1)	27.5 (19.5)
Ultimate vacuum[1]	mbar (Torr)	3×10^{-3} (2.3×10^{-3})			1×10^{-3} (7.5×10^{-4})	
Ultimate pressure with gas ballast	mbar (Torr)	2×10^{-1} (1.5×10^{-1})	2.5×10^{-2} (1.9×10^{-2})	6.5×10^{-1} (4.8×10^{-1})	1.5×10^{-2} (1.1×10^{-2})	
Ultimate pressure with PFPE oil	mbar (Torr)			3×10^{-1} (2.3×10^{-1})	1×10^{-2} (7.5×10^{-3})	1×10^{-2} (7.5×10^{-3})
Water vapour tolerance	mbar (Torr)	15 (11)		50 (38)	20 (15)	30 (23)
Water vapour handling capacity	gh^{-1}	8	16	650	300	700
Maximum continuous inlet pressure	mbar a (Torr a)	1013 (760)				
Maximum gas ballast/purge pressure	bar gauge (psig)	0.5 (7)				
MOTOR DATA						
Supply voltage	V	100-120/200-240 (+/- 10%)		115/200-230 (+/- 10%)		
Supply frequency	Hz	50/60				
Motor power, 50 Hz (60 Hz)	W	90 (90)	160 (160)	550 (750)		750 (900)
Nominal rotation speed, 50 Hz (60 Hz)	rpm	1400 (1700)	2800 (3400)	1440 (1720)		
Power connector [2]		IEC EN60320 C13		IEC EN60320 C19		
Recommended fuse, 230 V (115 V)	A	6 (10)		15 [3] (25)		
PHYSICAL DATA						
Weight	kg (lb)	10 (22)		37 (82)	39 (86)	44 (97)
Oil type (recommended)		Ultragrade 15		Ultragrade 19		
Oil capacity (min - max)	litre	0.2 - 0.28		0.9 - 1.4	0.75 - 1.05	1.2 - 1.5
Inlet connection		NW10		NW25		
Exhaust connection [4]		Nozzle 11 mm external Ø removable from 3/4 in BSP tapped hole		Nozzle 15 mm external Ø removable from 3/4 in BSP tapped hole		
Noise level at ultimate (50 Hz)	dB(A)	43	54	57		
Noise with acoustic enclosure	dB(A)	36	47	50		
Vibration at inlet flange	mms^{-1} (rms)	No data			< 4.5	
Operating temperature range	˚C (˚F)	12 to 40 (54 to 104)		13 to 40 (55 to 104)		

(1) measured as total pressure
(2) pumps listed with IEC connector only
(3) for UK 240 V use 13 A fuse
(4) PFPE variants are supplied with NW25 outlet connection

E2M0.7

E2M1.5

E1M18

E2M18

E2M28

Dimensions

E2M0.7/E2M1.5

1. 220-240 V motor
2. Handle (can be removed)
3. Alternative inlet port position

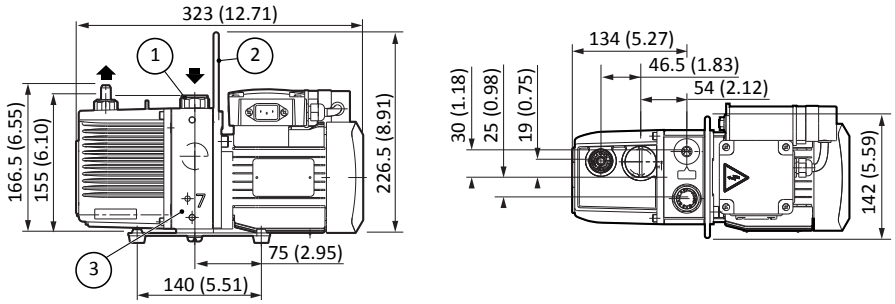

E1M18/E2M18 and E2M28

Single phase pump shown,
3 phase pump is similar.

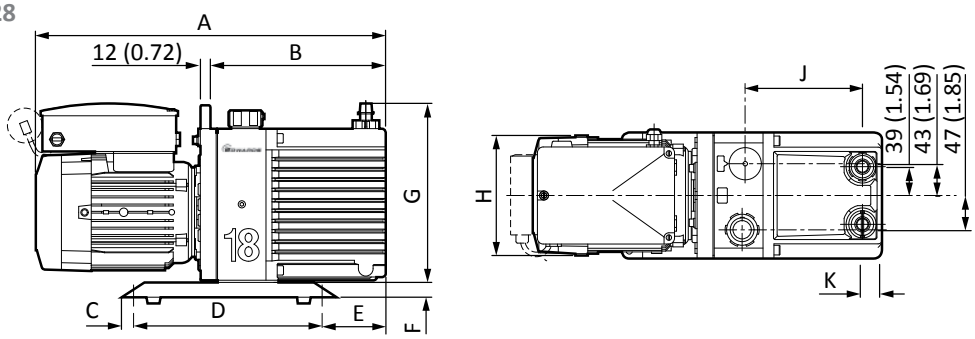

	A	B	C	D	E	F	G	H	J	K
E1M18	504 (19.84)	247 (9.72)	10 (0.39)	260 (10.24)	83 (3.27)	20 (0.79)	251 (9.88)	170 (6.69)	159 (6.26)	27.4 (1.08)
E2M18	550 (21.65)	295 (11.61)	10 (0.39)	260 (10.24)	131 (5.16)	20 (0.79)	251 (9.88)	170 (6.69)	207 (8.15)	27.4 (1.08)
E2M28	584 (22.99)	331 (13.03)	13 (0.51)	347 (13.66)	111 (4.37)	20 (0.79)	251 (9.88)	170 (6.69)	240.5 (9.47)	25.5 (1.00)

Performance

E2M0.7 and E2M1.5

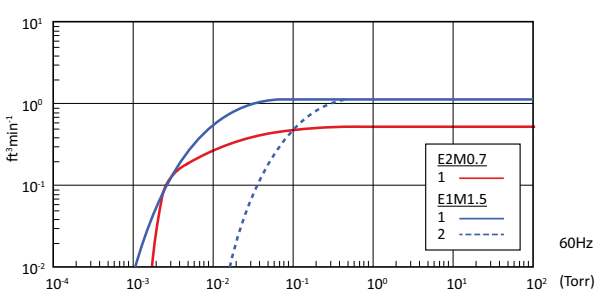

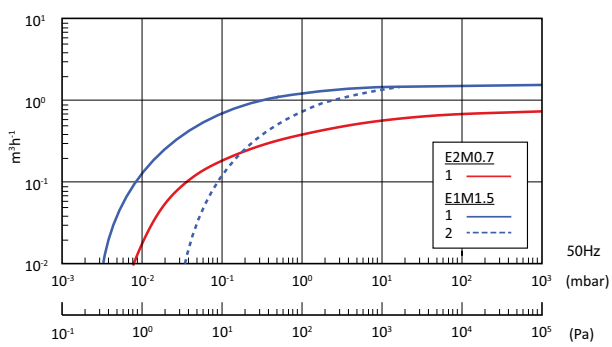

E1M18/E2M18 and E2M28

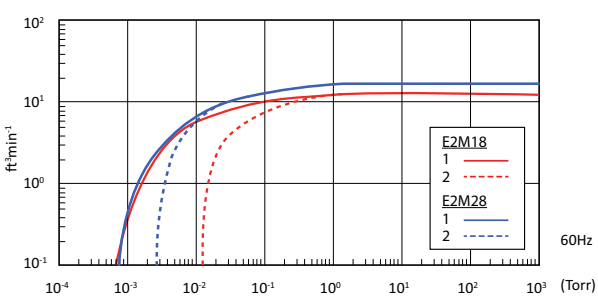

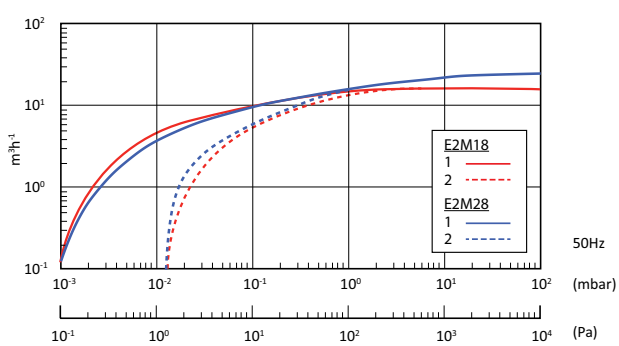

1. without gas ballast
2. with gas ballast

Ordering information

Pumps:

Product description	Order no.	
	Ultragrade	PFPE
E2M0.7 200-230V, 1-ph, 50/60Hz, IEC 60320 connectors	A37141919	-
E2M0.7 100-120V, 1-ph, 50/60Hz, IEC 60320 connectors	A37141902	-
E2M1.5 200-230V, 1-ph, 50/60Hz, IEC 60320 connectors	A37132919	-
E2M1.5 100-120V, 1-ph, 50/60Hz, IEC 60320 connectors	A37132902	-
E1M18 200-230/380-415V, 3-ph, 50Hz or 200-230/460V, 3-ph, 60Hz	A34310940	-
E1M18 115/200-230V, 1-ph, 50/60Hz with IEC60320 connector, factory set to 230V	A34317984	A34325984
E2M18 200-230/380-415V, 3-ph, 50Hz or 200-230/460V, 3-ph, 60Hz	A36310940	A36321940
E2M18 115/200-230V, 1-ph, 50/60Hz with IEC60320 connector	A36317984	A36325984
E2M28 HC IE3 EU/US 50/60Hz, 380-400V 3-ph, 50Hz or 230/460V 3-ph, 60Hz	A37333940	A37343940
E2M28 HC IE3 Asia 50/60Hz, 200V 3-ph, 50/60Hz or 380V 3-ph, 60Hz	A37333934	A37343934
E2M28 115/200-230 V, 1-ph, 50/60 Hz with IEC60320 connector	A37317984	A37325984

Accessories and spares:

Product	Product description		Order no.
E2M0.7/1.5	Accessories	Oil mist filter - EMF3	A46220000
		NW10 x 3/8” BSP adapter	A23908064
		Vibration isolator (pack of 4)	A24801407
	Spares	Clean and overhaul kit - E2M0.7/1.5	A37101131
		Spares kit blade - E2M0.7/1.5	A37101132
	Oil	Ultragrade 15, 1 litre bottle	H11026015
		Ultragrade 15, 4 litre bottle	H11026013
	Cord sets	UK, three pin plug	A50505000
		North European plug	A50506000
		North America/Japan plug	A50507000
		No plug	A50508000
E1M18/ E2M18/ E2M28	Accessories	Oil mist filter - EMF20 (1)	A46229000
		Oil mist filter - MF30	A46233000
		NW25 to 28mm bore tube adaptor	C10520201
		¾” BSP to NW25 outlet adaptor	C10501414
		E1M18/E2M18 Vibration isolator (pack of 4)	A24801404
		E2M28 Vibration isolator (pack of 4)	A24801412
		Acoustic Enclosure 110-120 V	NRD317000
		Acoustic Enclosure 200-240 V	NRD318000
	Spares	Clean and overhaul kit - E1M18/E2M18	A36301131
		Spares kit blade - E1M18	A34301041
		Spares kit blade - E2M18	A36301020
		Clean and overhaul kit - E2M28	A37301131
		Blade kit - E2M28/30	A37301135
	Oil	Ultragrade 19, 1 litre bottle	H11025015
		Ultragrade 19, 4 litre bottle	H11025013
		Fomblin® YVAC 06/6 fluid 1 kg (532 ml)	H11301019
		Fomblin® YVAC 06/6 fluid 5 kg (2660 ml)	H11301020
	Cord sets	UK, three pin plug	A50505003
		North European plug	A50506003
		North America/Japan plug	A50507003
		No plug	A50508003

(1) suitable for EM18 and E2M28 on low throughput applications

Extended warranty:

Product	2 year extension	3 year extension
E2M0.7	EW2AA5013	EW3AA5013
E2M1.5	EW2AA5014	EW3AA5014
E1M18	EW2AA5023	EW3AA5023
E1M18 PFPE	EW2AA5024	EW3AA5024

Product	2 year extension	3 year extension
E2M18	EW2AA5025	EW3AA5025
E2M18 PFPE	EW2AA5026	EW3AA5026
E2M28	EW2AA5027	EW3AA5027
E2M28 PFPE	EW2AA5028	EW3AA5028

RV ROTARY VANE PUMPS

RV oil sealed pumps have been the industry standard rotary vane pump for laboratory applications for many years thanks to design features that make them low cost to operate and maintain versus other rotary pumps.

With their unique mode selector, one pump can be used for both high throughput and high vacuum applications; self-centring mechanism, no dowels to set and can replace any component; high vapour pumping capability and broad range of accessories makes RV pumps the best long term proposition for laboratory applications.

PRODUCT FEATURES

UNIQUE MODE SELECTOR SWITCH

enables high vacuum and high throughput operation from a single pump.

HIGH GAS BALLAST FLOW RATE

for up to 220 gh^{-1} water vapour pumping capacity.

FAST ACTING INLET VALVE

with controlled opening for system protection.

HIGH QUALITY OILS

with additives to prolong life whilst not impacting vapour pressure.

LOW NOISE

at just 48 dB(A).

O RING SEALED SIGHT GLASS

allows visual inspection of oil level condition.

FORCED AIR COOLING

ensures low pump surface temperature.

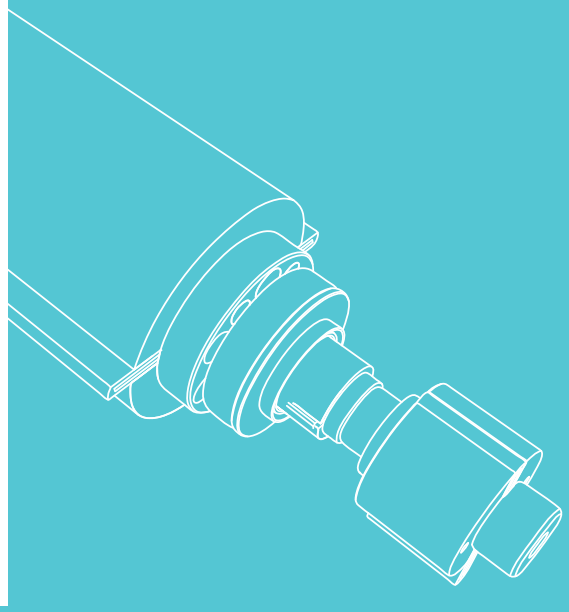

Technical data

	Units	RV3	RV5	RV8	RV12
VACUUM DATA					
Peak pumping speed, 50 Hz (60 Hz)	m^3h^{-1} (cfm)	3.3 (2.3)	5.1 (3.6)	8.5 (5.9)	12 (8.4)
Ultimate vacuum [1]	mbar (Torr)	2.0×10^{-3} (1.5×10^{-3}); 2.0×10^{-2} (1.5×10^{-2}) with PFPE oil			
Ultimate vacuum with gas ballast 1	mbar (Torr)	3.0×10^{-2} (2.3×10^{-2})			
Ultimate vacuum with gas ballast 2	mbar (Torr)	1.2×10^{-1} (9.1×10^{-2})		6.0×10^{-2} (4.6×10^{-2})	1.2×10^{-1} (9.1×10^{-2})
Ultimate vacuum in high throughput mode	mbar (Torr)	3.0×10^{-2} (2.3×10^{-2})			
Water vapour tolerance	mbar (Torr)	80 (60)	50 (38)	60 (45)	32 (24)
Water vapour handling capacity	gh^{-1}	220			290
Maximum continous inlet pressure [2]	mbar a (Torr a)	1013 (760)			
Maximum gas ballast/purge pressure	bar gauge (psig)	0.5 (7)			
MOTOR DATA					
Motor rating 1 phase (nominal), 50 Hz (60 Hz)	W	450 (550)			
Motor rating 3 phase, 50 Hz (60 Hz)	W	250 (300)		450 (550)	
Nominal rotational speed, 50 Hz (60 Hz)	rpm	1470 (1760)			
PHYSICAL DATA					
Weight	kg (lb)	25 (55)		28 (61.6)	29 (63.8)
Oil type (recommended)		Ultragrade 19			
Oil capacity (min - max)	litres	0.42 - 0.7		0.45 - 0.75	0.65 - 1.0
Inlet connection		NW25			
Exhaust connection		NW25			
Noise level at ultimate (50 Hz)	dB(A)	48			
Noise level with Acoustic Enclosure (50 Hz)	dB(A)	41			
Vibration at inlet flange	mm^{-1} (rms)	< 4.5			
Operating temperature range	°C (°F)	12 to 40 (54 to 104)			

(1) measured as total pressure
(2) pump should be operated in high throughput mode for continuous operation above 100 mbar

Dimensions

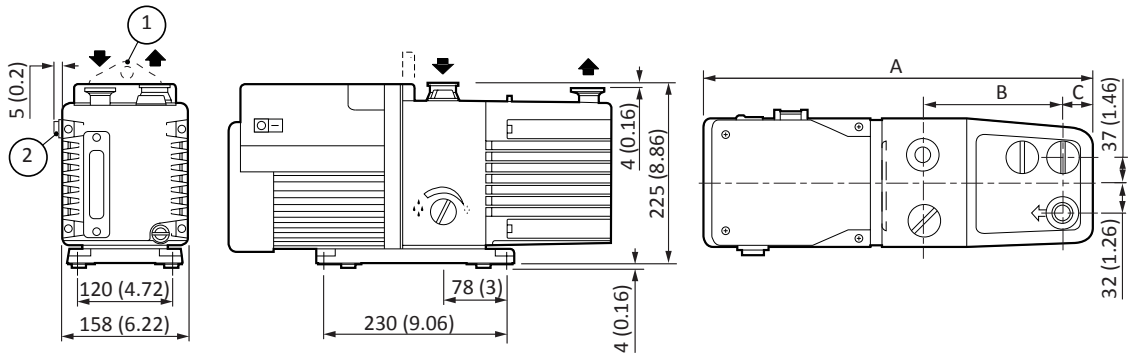

1. *Lifting bracket (RV8 and RV12 pumps only; a lifting handle is fitted to the RV3 and RV5 pumps).*
2. *On-off switch (single-phase pumps only).*

	A	B	C	D	E	F
RV3	430 (16.93)	158 (6.22)	225 (8.86)	156 (6.41)	111 (4.37)	29 (1.14)
RV5	430 (16.93)	158 (6.22)	225 (8.86)	156 (6.41)	111 (4.37)	29 (1.14)
RV8	470 (18.50)	158 (6.22)	225 (8.86)	196 (7.72)	111 (4.37)	35 (1.38)
RV12	490 (19.29)	158 (6.22)	225 (8.86)	216 (8.50)	111 (4.37)	35 (1.38)

Single phase pump diagram shown, 3 phase pumps look different but share the same dimensions.
Dimensions shown in mm(inch).

Performance

RV3/RV5 50 Hz

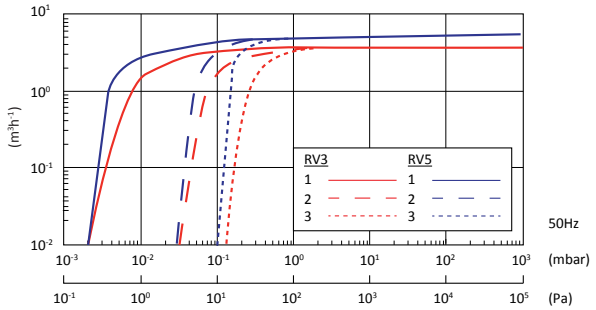

RV3/RV5 60 Hz

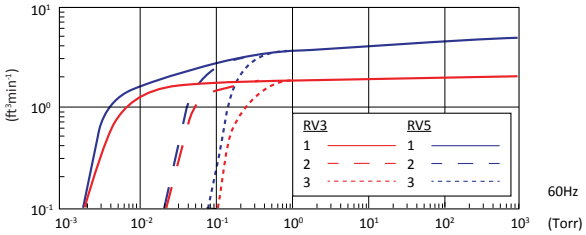

RV8/RV12 50 Hz

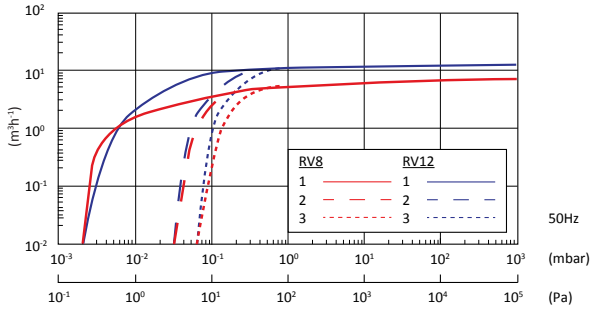

RV8/RV12 60 Hz

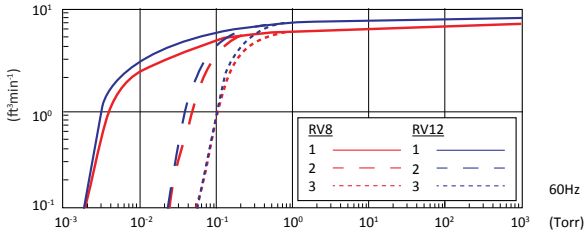

1. High vacuum mode, gas ballast = 0
2. High throughput mode, gas ballast = 0, High vacuum mode, gas ballast = I
3. High throughput and vacuum mode, gas ballast = II

Ordering information

Pumps:

Product description		Order no.	Order no.
		Ultragrade Oil	PFPE prepared (1)
RV3	115/230V, 50/60Hz set to 230V	A65201903	A65209903
	100/200V, 50/60Hz	A65201904	A65209904
	200-220/380-415V, 50Hz 200-230/460V, 60Hz, 3 phase	A65201905	A65209905
	115/230V, 50/60Hz set to 115V	A65201906	A65209906
RV5	115/230V, 50/60Hz set to 230V	A65301903	A65309903
	100/200V, 50/60Hz	A65301904	A65309904
	200-220/380-415V, 50Hz 200-230/460V, 60Hz, 3 phase	A65301905	A65309905
	115/230V, 50/60Hz set to 115V	A65301906	A65309906
RV8	115/230V, 50/60Hz set to 230V	A65401903	A65409903
	100/200V, 50/60Hz	A65401904	A65409904
	200-220/380-415V, 50Hz 200-230/460V, 60Hz, 3 phase	A65401905	A65409905
	115/230V, 50/60Hz set to 115V	A65401906	A65409906
RV12	115/230V, 50/60Hz set to 230V	A65501903	A65509903
	100/200V, 50/60Hz	A65501904	A65509904
	200-220/380-415V, 50Hz 200-230/460V, 60Hz, 3 phase	A65501905	A65509905
	115/230V, 50/60Hz set to 115V	A65501906	A65509906

(1) PFPE fluid not included

Accessories and spares:

	Product description	Order no.
Accessories	Foreline trap - FL20K	A13305000
	Oil mist filter - EMF10	A46226000
	Oil mist filter - EMF20	A46229000
	Clean application oil return kit	A50419000
	Adjustable gas ballast oil return kit	A50523000
	Vibration isolators (pack of 4)	A24801404
	Acoustic enclosure 110-120V	NRD317000
	Acoustic enclosure 200-240V	NRD318000
Spares	Clean and overhaul kit	A65201131
	RV3 blade kit	A65201130
	RV5 blade kit	A65301130
	RV8 blade kit	A65401130
	RV12 blade kit	A65501130
Oil	Ultragrade 19, 1 litre bottle	H11025015
	Ultragrade 19, 4 litre bottle	H11025013
	Fomblin YVAC 06/6 1 kg (532 ml)	H11301019
	Fomblin YVAC 06/6 5 kg	H11301020
Cord sets	UK, three pin plug	A50505000
	North European plug	A50506000
	North American plug	A50507000
	No plug	A50508000

Pumps fitted with ATEX approved motors are available, contact Edwards for details
Pumps are supplied with initial charge of Ultragrade oil.

Extended warranty:

Product	2 year extension	3 year extension
RV3	EW2AA5015	EW3AA5015
RV3 PFPE	EW2AA5016	EW3AA5016
RV5	EW2AA5017	EW3AA5017
RV5 PFPE	EW2AA5018	EW3AA5018
RV8	EW2AA5019	EW3AA5019
RV8 PFPE	EW2AA5020	EW3AA5020
RV12	EW2AA5021	EW3AA5021
RV12 PFPE	EW2AA5022	EW3AA5022

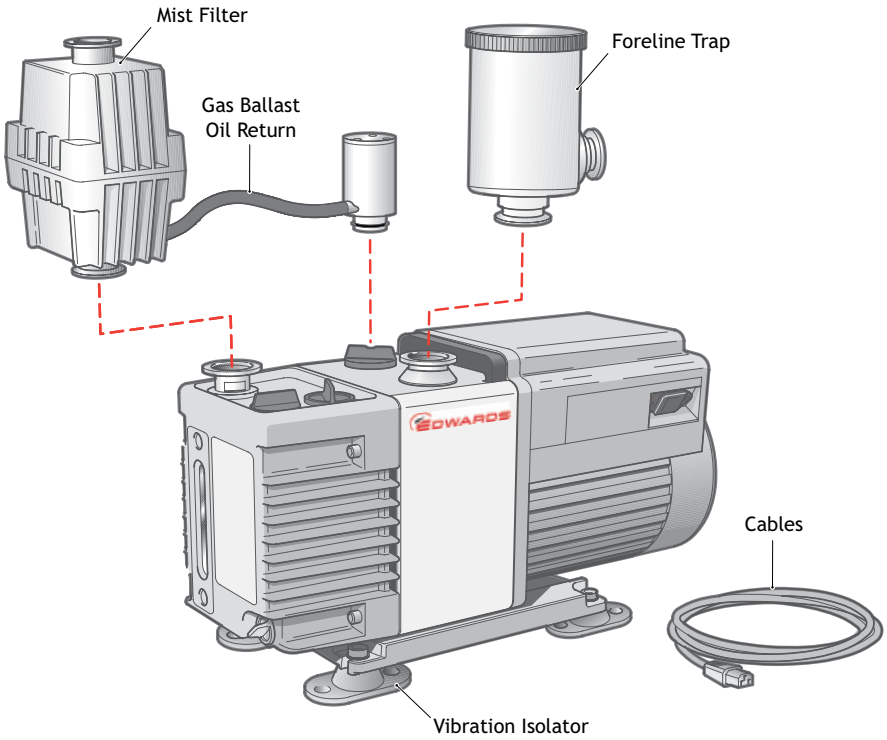

nEXT TURBOMOLECULAR PUMPS

nEXT turbomolecular pumps are hybrid bearing pumps with a compound drag stage and integrated controllers for pumping speeds from 47 to 400 ls^{-1}. They all feature a permanent magnetic upper bearing, which eliminates hydrocarbons at the top of the rotor and an oil lubricated lower bearing for reliable high speed operation.

The on-board controller interfaces directly with our TIC and TAG controllers to provide low cost system integration. The nEXT models also allow user serviceability by way of a user changeable bearing cartridge for low cost of ownership.

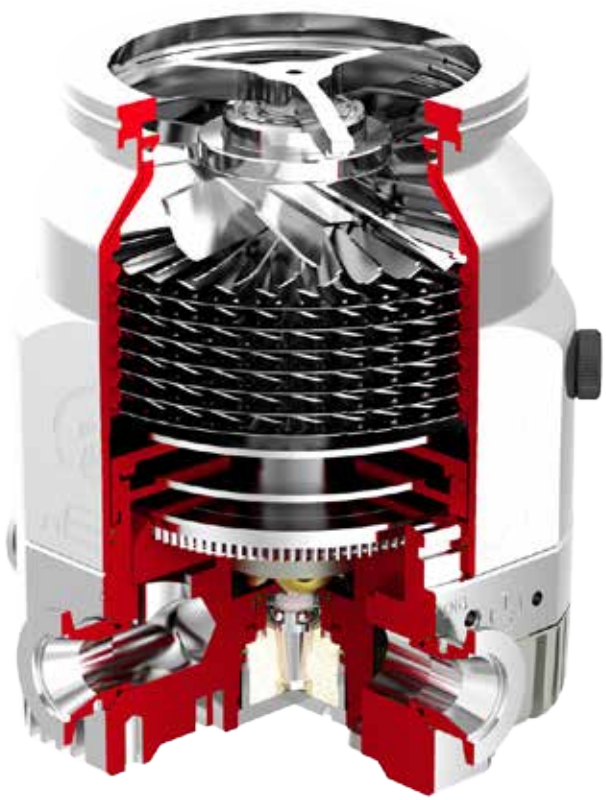

nEXT300 turbomolecular pump shown

PRODUCT FEATURES

UPPER MAGNETIC BEARING

ensures clean vacuum, low power and low vibration.

INLET SCREEN

supplied as standard (not shown).

OPTIMISED ROTOR DESIGNS

deliver high speeds and high compression.

RANGE OF VARIANTS SUITABLE FOR MANY APPLICATIONS

D = standard nEXT pump variant.
H = optimised rotor design for high light gas compression
T = additional regenerative stage for increased compression and higher backing pressure capability.

MANUAL VENT VALVE

offers a safe place to vent system with no risk of damage to pump and can be replaced with a solenoid valve for fully automated venting.

INTEGRATED CONTROLLER

offers direct I/O or serial control or can be connected to one of our TAG or TIC controllers for easy systemisation.

FULLY USER-SERVICEABLE

oil cartridge and bearings can be changed in the field with minimal tooling.

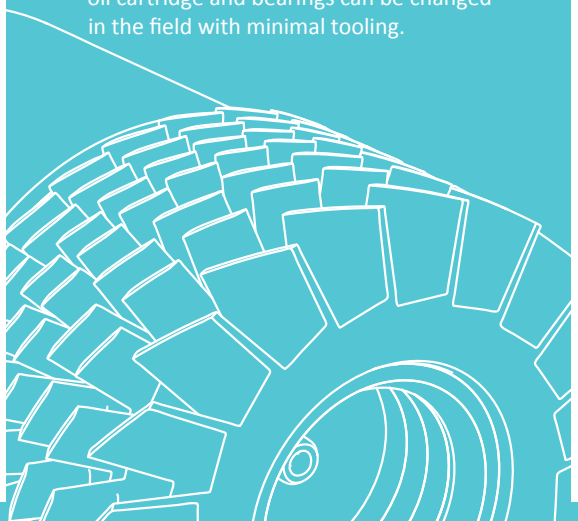

Technical data

		Units	nEXT85 DN40	nEXT85 DN63	nEXT240	nEXT300	nEXT400
VACUUM DATA							
Peak pumping speed	N_2	ls^{-1}	47	84	240	300	400
	Ar		44	80	230	280	380
	He		61	78	230	340	390
	H_2		49/44 (D/H)	60/54 (D/H)	165	280	325
Compression ratio	N_2		$> 10^{11}$		$> 10^{11}$ (D&T)		
	Ar		$> 10^{11}$		$> 10^{11}$ (D&T)		
	He		$8 \times 10^6/2 \times 10^7$ (D/H)		$3 \times 10^5/10^6$ (D/T)	$10^6/3 \times 10^6$ (D/T)	$10^8/>10^8$ (D/T)
	H_2		$2 \times 10^5/5 \times 10^5$ (D/H)		$10^4/10^5$ (D/T)	$5 \times 10^4/10^5$ (D/T)	$5 \times 10^5/10^6$ (D/T)
Ultimate vacuum (CF)		mbar	$<5 \times 10^{-10}$				
Maximum backing pressure	N_2	mbar	18		9.5/20 (D/T)		
MOTOR DATA							
Maximum power consumption		W	80 (range 50 - 120)		160 (range 50 - 200)		
Operating voltage		V d.c.	24 - 48				
Nominal rotational sped		rpm	90,000		60,000		
PHYSICAL DATA							
Weight (ISO/CF)		kg	3	3/4.5	6/9		7/10
Inlet connection			NW40	ISO63 or CF63	ISO100 or CF100		ISO160 or CF160
Backing connection			NW16		NW25		
Magnetic field tolerance		mT	5				
Run-up time		secs	115			145	175
Orientation of installation			Flange upright through to horizontal +/- 2°				
Cooling method			Ambient/Air/Water				
Maximum system flange temperature during bakeout (CF only)			Water cooled/forced air cooled 120/115°C				
Bearing technology			Permanent magnetic upper; oil lubricated ceramic lower				
User-serviceable bearings			Yes				
Controller type			Integrated				
Interfaces			RS232, 485, I/O				
Optional interfaces			External Profibus				

nEXT85

nEXT240

nEXT300

nEXT400

Dimensions

nEXT85

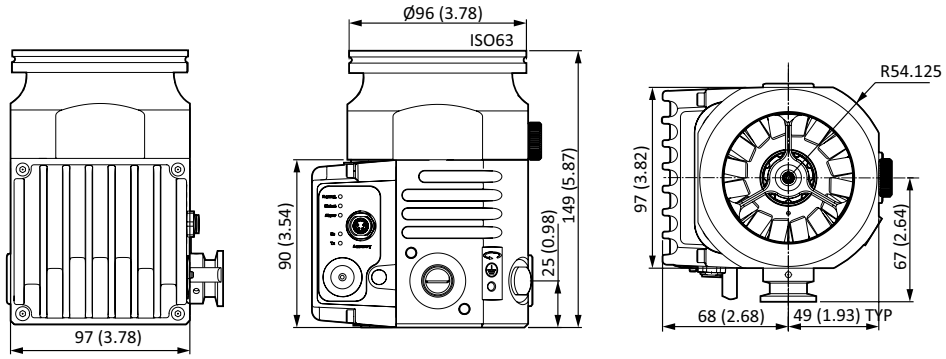

nEXT240/300/400

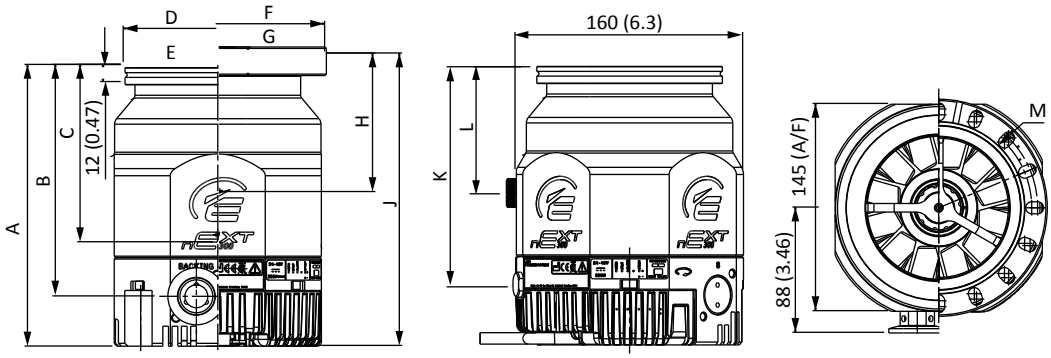

	nEXT240	nEXT300	nEXT400
A	189	195	195
B	155	160	160
C (C of G)	116	117	102
D	130	130	180
E	ISO100	ISO100	ISO160
F	152	152	202

	nEXT240	nEXT300	nEXT400
G	CF100	CF100	CF160
H (C of G)	90	100	81
J	197	210	200
K	147	153	153
L	83	87	89
M	(16)Ø8.4	(16)Ø8.4	(20)Ø8.4

Performance

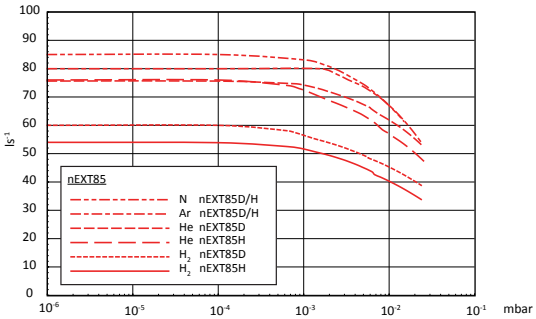

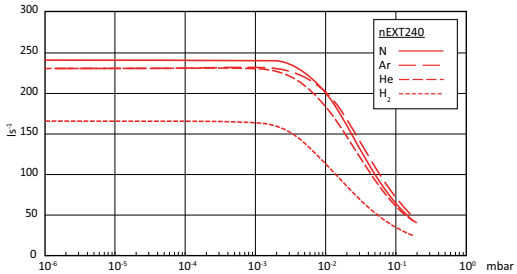

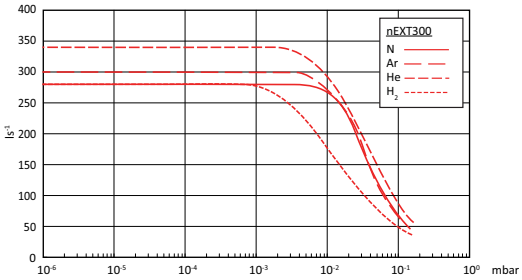

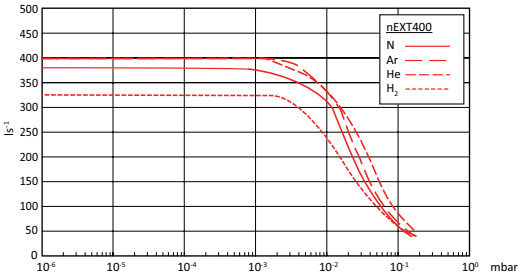

Ordering information

Pumps:

Product description	Order no.
nEXT85D NW40	B8G210A01
nEXT85D ISO63	B8G210B01
nEXT85D CF63	B8G210C01
nEXT85H NW40	B8G410A01
nEXT85H ISO63	B8G410B01
nEXT85H CF63	B8G410C01
nEXT240D ISO100 160W	B81200100
nEXT240D CF100 160W	B81200200
nEXT240T ISO100 160W	B81300100
nEXT240T CF100 160W	B81300200
nEXT300D ISO100 160W	B82200100
nEXT300D CF100 160W	B82200200
nEXT300T ISO100 160W	B82300100
nEXT300T CF100 160W	B82300200
nEXT400D ISO160 160W	B83200300
nEXT400D CF160 160W	B83200400
nEXT400T ISO160 160W	B83300300
nEXT400T CF160 160W	B83300400

Extended warranty:

Warranty extension (total)	Order no.
nEXT85 2 year	EW2AA5093
nEXT85 3 year	EW3AA5093
nEXT240 2 year	EW2AA5008
nEXT240 3 year	EW3AA5008
nEXT300 2 year	EW2AA5009
nEXT300 3 year	EW3AA5009
nEXT400 2 year	EW2AA5010
nEXT400 3 year	EW3AA5010

Accessories and spares:

Pump		Product description	Order no.
nEXT85	Controller (1)	TAG controller	D39592000
		TAG power supply	D39592800
		TIC100 turbo and instrument controller	D39721000
	Cooling	WCX85 water cooling kit (4 position)	B8G200833
		ACX85 air cooler connector fitted	B8G200820
	Venting	N/O TAV5 vent valve connector fitted	B8G200834
		N/C TAV5 vent valve connector fitted	B8G200835
	Bakeout	CF63 flange heater 110 V	B8G200823
		CF63 flange heater 240 V	B8G200824
	Service	Bearing replacement kit	B8G200827
		Oil cartridge kit	B8G200828
		Bearing and oil cartridge kit	B8G200811
		Bearing replacement tool kit	B8G200840
nEXT240/ 300/400	Controller (1)	TAG controller	D39592000
		TAG power supply	D39592800
		TIC200 turbo and instrument controller	D39722000
	Cooling	nEXT radial air cooler	B58053175
		nEXT axial air cooler	B58053185
		nEXT water cooler	B00000815
	Bakeout	CF100 100-120 V flange heater	NRF115700
		CF100 200-240 V flange heater	NRF114700
		CF160 100-120 V flange heater	NRF117700
		CF160 200-240 V flange heater	NRF116700
	Venting	TAV5 solenoid operated vent valve	B58066010
	Service	Oil cartridge tool kit	B80000812
		Bearing tool kit	B80000805
		Oil cartridge	B80000811
		Bearing and oil cartridge	B80000810
All	Extension cables	1 m pump to controller cable	D39700835
		3 m pump to controller cable	D39700836
		5 m pump to controller cable	D39700837
	Power cables (1)	2 m electrical supply cable UK plug	D40013025
		2 m electrical supply cable EU plug	D40013030
		2 m electrical supply cable US plug	D40013120
	Miscellaneous	Vent port adaptor	B58066011
		PRX10 purge restrictor	B58065001

(1) Denotes required accessory. Others optional depending on application.

T-STATION 85 TURBOMOLECULAR PUMPING STATION

Our T-Station 85 is a low cost, compact turbomolecular pumping station that seamlessly combines an nEXT85H turbomolecular pump with either a dry diaphragm or oil sealed backing pump, and a simple controller, providing pumping speeds of 47 to 84 ls^{-1}.

The T-Station 85 comes with an integrated Turbo and Active Gauge controller which enables single button start/stop of the system. With the ability to control one of our active gauges, vent valve control and delayed start of the turbomolecular pump to either time or pressure if a gauge is fitted, the T-Station 85 ideal for general laboratory needs.

PRODUCT FEATURES

CUSTOM INTEGRATED CONTROLLER FEATURES:

Single dedicated button to start/stop pumps; Easy to read accurate display; Ability to select vent mode where a TAV5 vent valve is fitted for automated venting with no user intervention.

HIGH CAPACITY BACKING PUMPS

E2M1.5 or XDD1 high capacity backing pumps giving the choice between an oil sealed pump or a totally dry diaphragm pump.

COMPACT LOW PROFILE

Base plate includes rubber feet and cut-outs in the sides for manual handling, giving a compact low profile but stable design that cannot be knocked over.

USER SERVICEABLE

The nEXT85 turbomolecular pump, XDD1 dry diaphragm pump and E2M1.5 backing pump are all user serviceable.

INTEGRATED AIR COOLER

Acts to cool internal power supply and pump/controller for quiet operation avoiding multiple fans.

RUGGED METAL FRAME

All metal frame means rugged design that can take abuse without cracking or breaking.

INLET FLANGE OPTIONS

Available with either an NW40, ISO63 or CF63 inlet flange to suit your application.

Dimensions

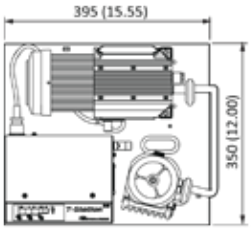

Top view

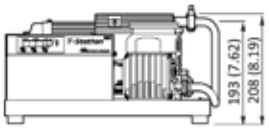

Front view

T-Station 85D with XDD1 backing pump

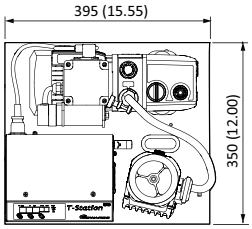

Top view

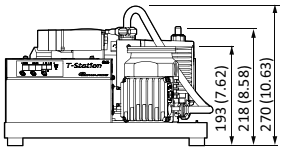

Front view

T-Station 85W with E2M1.5 backing pump

Technical data

		T-Station 85
Pumping speed for N_2	NW40	47 ls^{-1}
	ISO/CF63	84 ls^{-1}
Compression ratio for N_2		>1 x 10^{11}
Backing pump speed, 50 Hz (60 Hz)	E2M1.5 (TS85W)	1.6 m^3h^{-1} (1.2 cfm)
	XDD1 (TS85D)	1.2 m^3h^{-1} (0.9 cfm)
Ultimate vacuum (CF)		<5 x 10^{-10} mbar
Inlet connection		NW40, ISO63 or CF63
Exhaust connection	E2M1.5 (TS85W)	11mm OD nozzle or 3/8" BSP
	XDD1 (TS85D)	Fitted silencer or 1/8" BSP
Weight	E2M1.5 system (TS85W)	21 kg max
	XDD1 system (TS85D)	17 kg max
Noise level at ultimate		≤56 dB(A)
Leak tightness (static)		<1 x 10^{-6} mbar ls^{-1}
Operating temperature range		12 to 40 °C

Ordering information

Pumping station:

Product description	Order no.
T-Station 85H Wet NW40 200-240V	TS85W1001
T-Station 85H Wet ISO63 200-240V	TS85W2001
T-Station 85H Wet CF63 200-240V	TS85W3001
T-Station 85H Dry NW40 200-240V	TS85D1001
T-Station 85H Dry ISO63 200-240V	TS85D2001
T-Station 85H Dry CF63 200-240V	TS85D3001
T-Station 85H Wet NW40 100-120V	TS85W1002
T-Station 85H Wet ISO63 100-120V	TS85W2002
T-Station 85H Wet CF63 100-120V	TS85W3002
T-Station 85H Dry NW40 100-120V	TS85D1002
T-Station 85H Dry ISO63 100-120V	TS85D2002
T-Station 85H Dry CF63 100-120V	TS85D3002

Accessories, spares and extended warranty:

	Product description	Order no.
Accessories	EMF3 mist filter for E2M1.5	A46220000
	N/O TAV5 vent valve connector fitted	B8G200834
	N/C TAV5 vent valve connector fitted	B8G200835
	APG100 XLC NW16 Pirani Gauge	D02603000
	AIM X NW25 Inverted Magnetron Gauge	D14642000
	WRG-S NW25 Wide Range Gauge	D14701000
	APGX-H NW25 Convection Gauge	D02391000
Cord sets	2 m electrical supply cable UK plug	A50505000
	2 m electrical supply cable EU plug	A50506000
	2 m electrical supply cable North America/Japan plug	A50507000
	2m electrical supply cable no plug	A50508000
	0.5 m Gauge cable	D40001005
	1 m Gauge cable	D40001010
Warranty	T-Station 85 2 year total warranty extension	EW2AA5094
	T-Station 85 3 year total warranty extension	EW3AA5094

nEXT TURBOMOLECULAR PUMPING STATIONS

nEXT turbomolecular pumping stations are configurable with turbomolecular pump speeds ranging from 47 to 400 ls^{-1} and a choice of oil sealed or dry backing pumps ranging from 1 to 20 m^3h^{-1}. All our nEXT turbomolecular pumping stations feature an integrated TIC turbo and instrument controller offering full control of the package via a simple intuitive interface.

The nEXT turbomolecular pumping stations are supplied fully assembled and ready to run straight out of the box and include common accessories such as mist filters and mains cables as appropriate to the chosen pumps. As fully featured high end stations they include RS232 serial communications and Windows® software for monitoring and control.

PRODUCT FEATURES

RANGE OF TURBOMOLECULAR PUMP OPTIONS

Choice of turbomolecular pump with speeds ranging from 47 to 400 ls^{-1} and inlet flanges from DN40 to DN160.

FULLY CONTROLLABLE

TIC turbo and instrument controller offers full control of pumps and up to 3 Active gauges as well as offering full serial remote communications.

VENT VALVE OPTION

Optional turbomolecular pump vent valve can be ordered as part of cart assembly.

USER SERVICEABLE

All nEXT turbomolecular pumps and backing pumps are fully user serviceable.

ROBUST METAL FRAME

All metal frame with locking castors for a robust but easily mobile system. Bench mounting kit included for safe bench top operation.

CHOICE OF BACKING PUMPS

Choice of oil sealed and dry backing pumps with capacities ranging from 1 to 20 m^3h^{-1}.

LOW VIBRATION

Backing pump mounted on anti-vibration mounts for low levels of transmitted vibration.

Dimensions

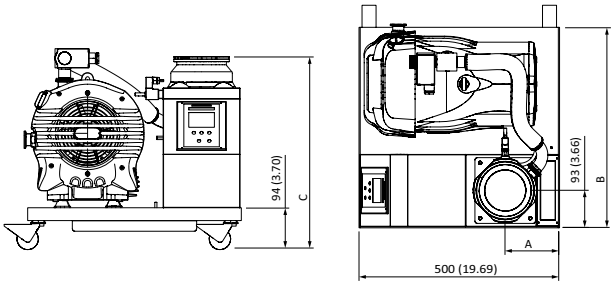

	A	B [1]	C
nEXT85 NW40	144	380/500	427
nEXT85 ISO63	144	380/500	401
nEXT85 CF63	144	380/500	415
nEXT240 ISO100	135.5	380/500	443.2
nEXT240 CF100	135.5	380/500	451.2
nEXT300 ISO100	135.5	380/500	448.7
nEXT300 CF100	135.5	380/500	463.2
nEXT400 ISO160	135.5	380/500	448.7
nEXT400 CF160	135.5	380/500	453.7

(1) 380 mm refers to small platforms with XDD1 backing pumps
500 mm refers to large platforms with nXDS/RV backing pumps

Technical data

		NEXT TURBO STATION
Peak pumping speed for N_2	NW40	47 ls^{-1}
	ISO/CF63	84 ls^{-1}
	ISO/CF100	240 or 300 ls^{-1}
	ISO/CF160	400 ls^{-1}
Compression ratio for N_2		>1 x 10^{11}
Backing pump speed, 50 Hz (60 Hz)	E2M1.5	1.6 m^3h^{-1} (1.2 cfm)
	RV	5.1 m^3h^{-1} (3.6 cfm)
	RV12	12 m^3h^{-1} (8.4 cfm)
	XDD1	1.2 m^3h^{-1} (0.9 cfm)
	nXDS6i	6.2 m^3h^{-1} (3.6 cfm)
	nXDS10i	11.4 m^3h^{-1} (6.7 cfm)
	nXDS15i	15.1 m^3h^{-1} (8.9 cfm)
	nXDS20i	22 m^3h^{-1} (13.0 cfm)
Ultimate vacuum (CF)		<5 x 10^{10} mbar
Inlet connection		NW40, ISO63, CF63, ISO100, CF100, ISO160 or CF160
Exhaust connection	E2M1.5	NW16
	XDD1	Fitted silencer or 1/8" BSP
	RV/nXDS	NW25
Weight	E2M1.5/XDD1	24.9 to 35 kg
	RV/nXDS	41.2 kg to 55 kg
Noise level at ultimate		≤ 56 dB(A)
Leak tightness (static)		<1 x 10^{-6} mbar ls^{-1}
Operating temperature range		12 to 40 °C

Ordering information

Pumping station:

T S □□-□□-0 0 □

Turbomolecular pump
B nEXT240
C nEXT300
D nEXT400
E nEXT240T
F nEXT300T
G nEXT400T
J nEXT85D
K nEXT85H

Inlet Flange
1 DN40NW (nEXT85)
2 DN63ISO-K (nEXT85)
3 DN63CF (nEXT85)
4 DN100ISO-K (nEXT240/300)
5 DN100CF (nEXT240/300)
6 DN160ISO-K (nEXT400)
7 DN160CF (nEXT400)

Backing Pump
1 E2M1.5
2 RV5
3 RV12
A XDD1
D nXDS6i
E nXDS10i
F nXDS15i
G nXDS20i

Vent Option
0 Manual Vent
1 TAV5 Vent Valve

Electrical Supply
1 220-240 V 50/60 Hz (Europe)
2 110-120 V 50/60 Hz (USA)
3 200 V 50/60 Hz (Japan)
4 220-240 V 50/60 Hz (UK)

Accessories:

Product description	Order no.
APG100 XLC NW16 Pirani Gauge	D02603000
AIM X NW25 Inverted Magnetron Gauge	D14642000
WRG-S NW25 Wide Range Gauge	D14701000
APGX-H NW25 Convection Gauge	D02391000
0.5 m Gauge cable	D40001005
1 m Gauge cable	D40001010

STP MAGLEV TURBOMOLECULAR PUMPS

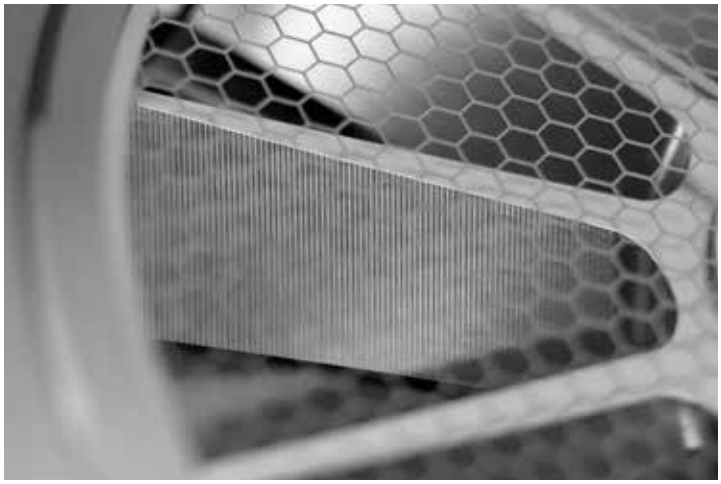

STP maglev turbomolecular pumps are the first choice for applications demanding high up-time, hydrocarbon-free pumping, minimal maintenance and low vibration. The multi-axis magnetic bearing system is used to suspend the rotor during operation, ensuring there is no risk of contamination while minimising noise and vibration.

The STP maglev turbomolecular pump range has a market leading reputation for quality and reliability and are the preferred choice for many of the most challenging semiconductor applications. For laboratory applications this makes STP maglev turbomolecular pumps extremely reliable and normally maintenance free.

PRODUCT FEATURES

CORROSION RESISTANCE

most models of Edwards STP maglev turbomolecular pumps are also available in a special corrosion resistant version with nickel coated rotors and a nitrogen purge facility, making them ideal for chemical laboratory applications.

VIBRATION FREE

magnetic levitation means no friction and thus extremely low vibration, in addition this remains constant and does not change as parts wear.

OIL FREE

the use of magnetic bearings eliminates all hydrocarbon lubricants.

AUTOMATIC BALANCING SYSTEM

Edwards 5-axis pumps are able adjust the magnetic field dynamically to take out rotor imbalances.

MAINTENANCE FREE

zero friction means no wear and thus no routine maintenance is required in normal operation.

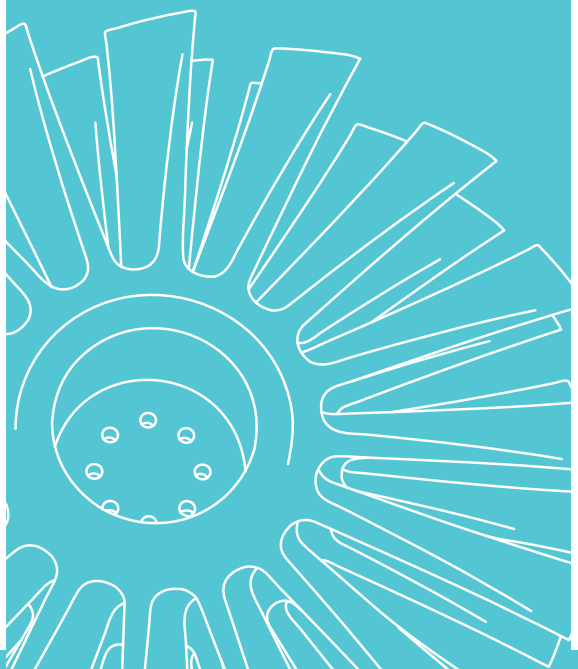

Technical data

		Units	STP301 DN100	STP451 DN160	STP603 DN160	STP1003 DN200	STPiX455 DN100	STPiX455 DN160	STPiXR1606 DN160	STPiXR1606 DN200/250
VACUUM DATA										
Pumping speed	N_2	ls^{-1}	300	480	650	1000	300	450	1000	1600
	H_2		300	460	550	800	300	460	800	1200
Compression ratio	N_2		$>10^8$							
	H_2		2×10^4		$>10^5$		1×10^4		1×10^3	
Ultimate vacuum (CF)		mbar	$<1 \times 10^{-10}$						$<1 \times 10^{-9}$	
Maximum flow rate	N_2	sccm	-						4700	
Maximum inlet pressure		mbar	6.7×10^{-4}		1×10^{-3}				-	
Maximum backing pressure		mbar	0.13				0.67		2.66	
MOTOR DATA										
Maximum power consumption		W	350		850		300		750	
Nominal rotational speed		rpm	48,000		35,000		55,000		36,500	
PHYSICAL DATA										
Weight		kg	11	12	31		16		48	
Vibration		mm	<0.01		<0.02		<0.01		<0.02	
Inlet connection			ISO100 or CF100	ISO160 or CF160	ISO160 or CF160	ISO200 or CF200	ISO100 or CF100	ISO160 or CF160	ISO160 or CF160	ISO200/250 or CF200/250
Backing connection			NW25		NW40		NW25		NW40	
Run-up time		secs	180		360				480	
Magnetic field tolerance axial/ radial		mT	15/3							
Orientation of installation			Any							
Cooling method			Ambient/Air/Water				Ambient/Air		Water	
Maximum flange temperature during bakeout (CF only)		°C	120							
Bearing technology			3 axis magnetically levitated		5 axis magnetically levitated					
Controller type			External				Integrated			
Power supply type			External						Integrated	
Interfaces			RS232, I/O							
Optional interfaces			Profibus				Profibus, EtherCAT			

STP301

STP451

STP603

STP1003

STPiX455

STPiXR1606

Images not to scale

Dimensions

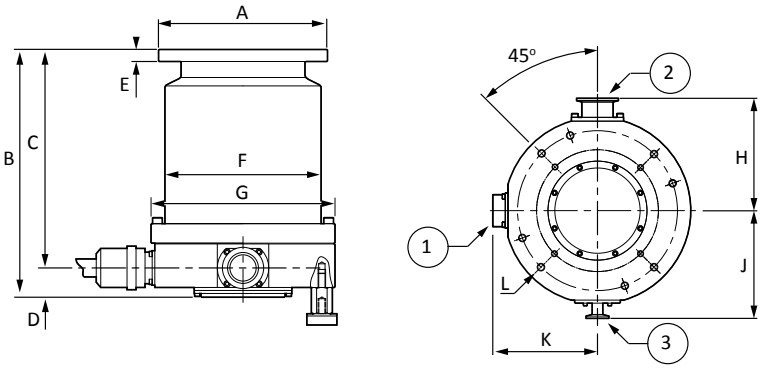

Note: STP603 pump shown

1. Electrical connector
2. Outlet port
3. Purge port

	A	B	C	D	E	F	G	H	J	K	L
STP301	Ø130 ISO100	230	197	33	12	Ø156	Ø180	108	110	100	8 x M8 x 16
	Ø152 DN100CF				22						
STP451	Ø180 ISO160	200	167	33	12	Ø156	Ø180	108	-	100	8 x M8 x 16
	Ø203 DN160CF				22						
STP603	Ø225 ISO160F	330	291	39	16	Ø208	Ø245	148	142	138	8 x M10 x 24
STP1003	Ø285 ISO200F	310	271	39	16	Ø208	Ø245	148	142	138	8 x M10 x 24
STPiX455	Ø130 ISO100	266	235	31	12	-	Ø180	108	-	165	4 x M12 x 25
	Ø180 ISO160	236	205								
STPiXR1606	Ø225 ISO160F	420	263	157	15	Ø237	Ø300	108	-	166	-
	Ø285 ISO200F	380	223		16						
	Ø335 ISO250F										

Performance

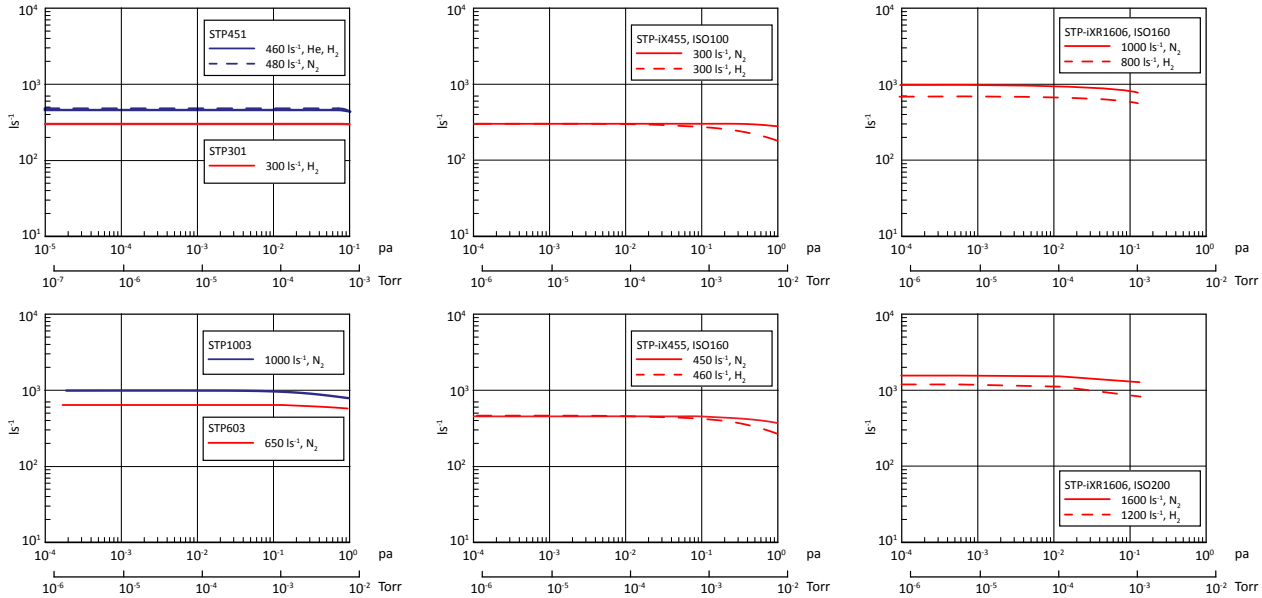

Ordering information

Pumps:

Product description	Order no.
STP301	
STP301 ISO100	YT21B0350
STP301 CF100	YT21B0010
STP451	
STP451 ISO160	YT21B0460
STP451 CF160	YT21B0080
STPiX455	
STPiX455 ISO100	PT640Z010
STPiX455 CF100	PT640Z050
STPiX455 ISO160	PT640Z020
STPiX455 CF160	PT640Z060
STP603	
STP603 ISO160	YT39B0030
STP603 CF160	YT390Z005
STP1003	
STP1003 ISO200	YT390Z001
STP1003 CF200	YT39B0010
STPiXR1606	
STPiXR1606 ISO160	YT790Z070
STPiXR1606 CF160	YT790Z090
STPiXR1606 ISO200	YT790Z010
STPiXR1606 CF200	YT790Z030
STPiXR1606 ISO250	YT790Z040
STPiXR1606 CF250	YT790Z060

Extended warranty:

1 year extension (3 year total)

Product description	3 year extension
STP301	EW3AA0127
STP451	EW3AA0129
STP603	EW3AA0135
STP1003	EW3AA0137
STPiX455	EW3AA0233
STPiXR1606	EW3AA0234

Accessories and spares:

Pump		Product description	Order no.
STP301/451	Controller (1)	SCU350 100-240V	YT21Z0Z01
		SCU350 100-240V with RS232	YT21ZEZ20
	Pump to controller cables (1)	3m cable	B70700010
		5m cable	B70700000
		10m cable	B70700130
		20m cable	B70700150
		30m cable	PT21Y0B00
	Mains cables (1)	3m	B70700090
		5m	B70700040
		10m	PT21Y0A00
	Cooling	115V air cooler	YT011A003
		220-240V air cooler	YT011A005
		Water cooling kit	YT21CA001
STP-iX455	Power supply (1)	iPS240 AC power supply 100-240V	PT64W0Z00
	Display unit	iDT001 with 3m cable	PT79U1Z00
		iDT001 with 5m cable	PT79U1Z40
		iDT001 with 10m cable	PT79U1Z50
		iDT001 with 15m cable	PT79U1Z10
	Pump to power supply cables (1)	2.5m cable	PT64Y0B15
		5m cable	PT64Y0B20
		10m cable	PT64Y0B30
		20m cable	PT64Y0B50
		30m cable	PT64Y0B60
	Mains cables (1)	3m	PT64Y1A10
		5m	PT64Y1A20
		10m	PT64Y1A30
	Cooling	Small air cooler	PT64QZA06
		Large air cooler	PT640U101
STP603/1003	Controller (1)	SCU800 100-120/200-240V with RS232/485	YT49Z2Z00
	Pump to controller cables (1)	3m cable	B75130050
		5m cable	B75130020
		10m cable	B75130060
		20m cable	B75130190
		30m cable	B75130210
	Mains cables (1)	3m	PT49Y0A05
		5m	PT49Y0A00
		10m	PT49Y0A01
	Cooling	100-115V air cooler	YT01BA210
		220-240V air cooler	YT011A050
		Water cooling kit	YT170A001
STPiXR1606	Display unit	iDT001 with 3m cable	PT79U1Z00
		iDT001 with 5m cable	PT79U1Z40
		iDT001 with 10m cable	PT79U1Z50
		iDT001 with 15m cable	PT79U1Z10
	Mains cables (1)	3m	YT79Y0A01
		5m	YT79Y0A00
		10m	YT79Y0A03
All	Bakeout	CF100 100-120 V flange heater	NRF115700
		CF100 200-240 V flange heater	NRF114700
		CF160 100-120 V flange heater	NRF117700
		CF160 200-240 V flange heater	NRF116700

(1) denotes required accessory, others are optional depending on application

EPX HIGH VACUUM PRIMARY PUMP

The EPX series uses a unique, patented, single-shaft regenerative and Holweck® stage mechanism that makes them capable of pumping from atmosphere to ultimate pressures of <1 x 10^{-4} mbar or <1 x 10^{-6} mbar depending on model. They are ideal for applications where a better base pressure is required than can be delivered by a typical primary pump and where otherwise a turbomolecular pump and primary pump would be required. They are also suitable for applications that cycle frequently from atmosphere to low pressures as they can operate continuously at all inlet pressures.

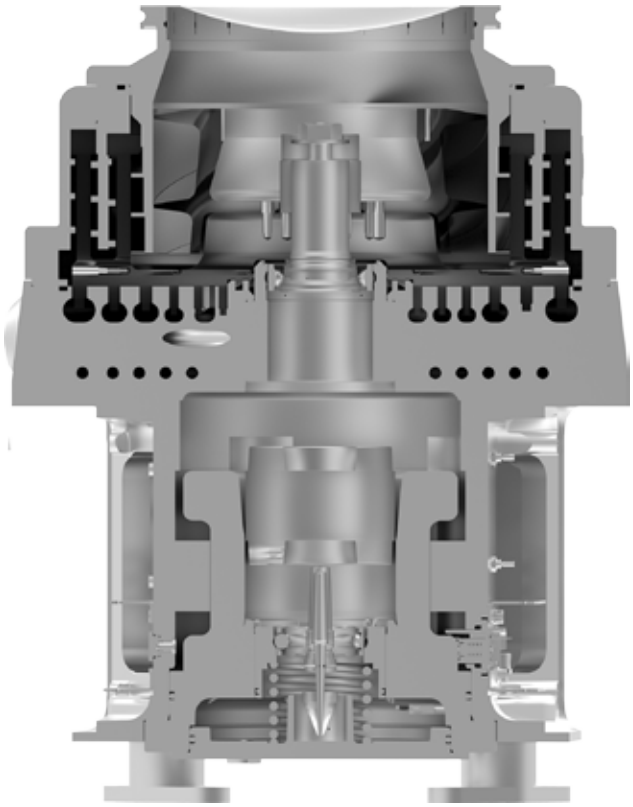

PRODUCT FEATURES

HOLWECK AND REGENERATIVE STAGES

for wide range performance with low heat and vibration.

ADDITIONAL HELICAL ROTOR STAGE (EPX500 ONLY)

for increased speed and 1 x 10^{-6} mbar capability.

COMPACT FOOTPRINT

EPX is smaller than the equivalent turbomolecular pump and primary pump combination.

ULTRA CLEAN MECHANISM

EPX pumps have no oil or grease under vacuum and present no other source of potential contamination.

WATER COOLED

for a low environmental head load.

NITROGEN PURGE FACILITY (N VARIANTS)

which makes them suitable for pumping vapours and low levels of corrosive vapours and particulates.

Technical data

		EPX180LE	EPX180NE	EPX500LE	EPX500NE
Peak pumping speed	m^3h^{-1} (cfm) [ls^{-1}]	175 (106) [50]		500 (295) [140]	
Ultimate vacuum	mbar (Torr)	<1 x 10^{-4} (<7 x 10^{-5})		<1 x 10^{-6} (<7 x 10^{-7})	
Maximum exhaust pressure	bar gauge (psig)	0.2 (2.9)			
Typical nitrogen consumption	slm	0	25	0	25
Cooling water consumption	l/h	120			
Supply voltage	V	200/208/400 3 phase (+/- 10%)			
Supply frequency	Hz	50/60			
Power at ultimate	kW	1.4	1.6	1.4	1.6
Maximum power	kW	3.0			
Weight	kg (lb)	45 (98)	47 (103)	46 (102)	48 (106)
Inlet/outlet connection		ISO63/NW25		ISO160/NW25	
Water connection		3/8" Quick			
Noise	dB(A)	<56			
Vibration at inlet flange	mms^{-1} (rms)	<1.3			

Dimensions

EPX180

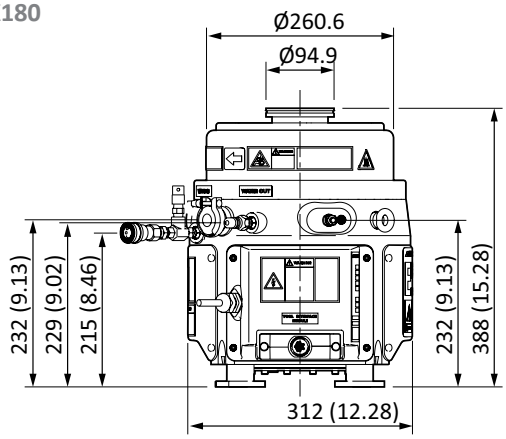

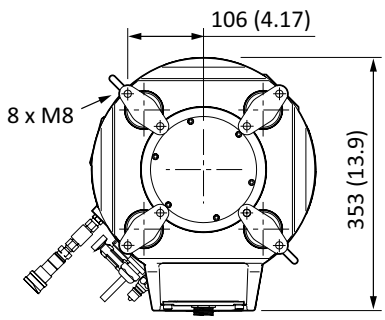

EPX500

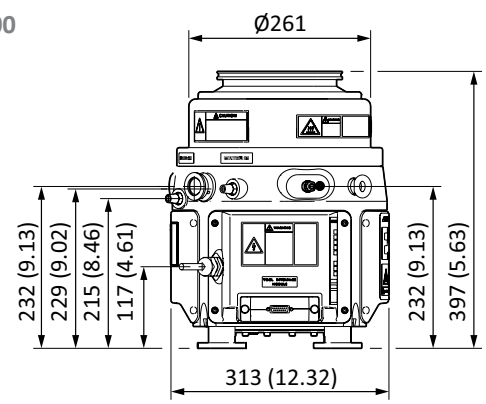

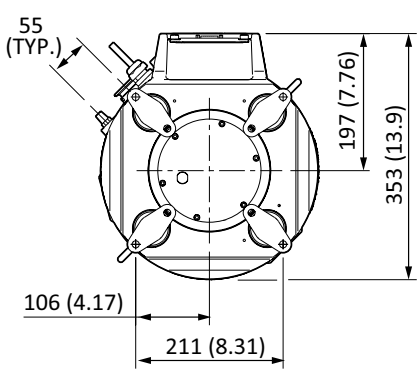

Performance

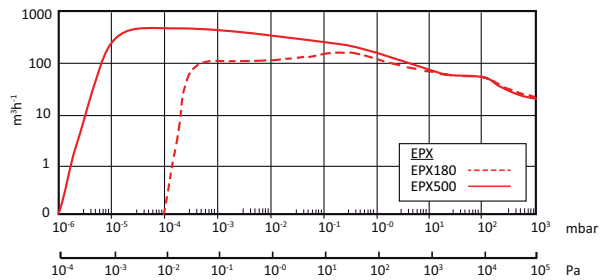

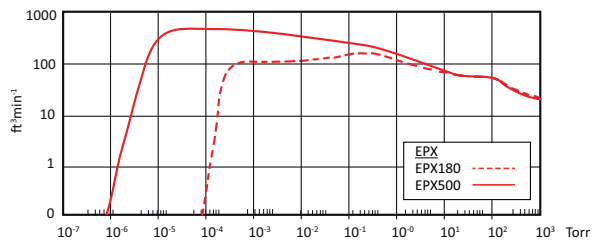

Ordering information

Product description	Order no.
EPX180LE 208V No TIM 3/8 water connectors	A41943012
EPX180LE 400V No TIM 3/8 water connectors	A41943014
EPX180LE 208V MCM TIM 3/8 water connectors	A41943712
EPX180LE 400V MCM TIM 3/8 water connectors	A41943714
EPX180NE 208V No TIM 3/8 water connectors	A41944012
EPX180NE 400V No TIM 3/8 water connectors	A41944014
EPX180NE 208V MCM TIM 3/8 water connectors	A41944712
EPX180NE 400V MCM TIM 3/8 water connectors	A41944714
EPX500LE 208V No TIM 3/8 water connectors	A41953012
EPX500LE 400V No TIM 3/8 water connectors	A41953014
EPX500LE 208V MCM TIM 3/8 water connectors	A41953712
EPX500LE 400V MCM TIM 3/8 water connectors	A41953714
EPX500NE 208V No TIM 3/8 water connectors	A41954012
EPX500NE 400V No TIM 3/8 water connectors	A41954014
EPX500NE 208V MCM TIM 3/8 water connectors	A41954712
EPX500NE 400V MCM TIM 3/8 water connectors	A41954714
Dry Pump Profibus Module	D39752000

GAMMA UHV PUMPS AND ACCESSORIES

Capture pumping technologies create high vacuum (HV) and ultra-high vacuum (UHV) environments for a variety of applications, ranging from portable mass spectrometers to large scale particle accelerators. They can create the highest possible vacuum at an economical cost.

Edwards offers a range of Ion Pumps, Titanium Sublimation Pumps, Non-Evaporable Getter Pumps and accessories exclusively through Gamma Vacuum.

PRODUCT FEATURES

MECHANICAL VIBRATION ELIMINATED

Capture pumps have no moving parts. Vibration from moving parts and electrical noise is eliminated.

HIGH RADIATION TOLERANCE

Capture pumps are built with radiation tolerant materials in excess of 10^8 Gray. Connectors and cables are also built with radiation tolerant materials for years of continuous operation.

HIGH TEMPERATURE TOLERANCE

Without any special consideration, capture pumps can be baked to 250 °C. Removing the magnets allows for hotter bakes up to 450 °C. Long hot bakes are critical to every UHV system.

REGULAR MAINTENANCE ELIMINATED

Capture pumps require virtually no maintenance and avoid costly vacuum events because they are sealed from atmosphere, saving time, money and resources.

LOW INITIAL AND OPERATIONAL COSTS

Initial cost is typically less than comparable specifications of other types of vacuum pumps. They use minimal or no power for years of low cost operation..

Ordering information

Ion pumps and integrated TSP/NEG:

Ion pump		Element		Flange		Feedthrough		Heater		Integrated TSP/NEG	
5S	5 ls^{-1}	CV	Conventional diode	2V	Vertical DN40	SC	10kV SAFECONN	N	None	N	None
10S	10 ls^{-1}	DI	Noble diode	2H	Horizontal DN40	OP	Perkin Elmer	1	110V	TSP	TSP single filament (S)
25S	20 ls^{-1}	CX	Diode XHV	2D	Double DN40	OV	Old Varian	2	208-240V	N0	50 ls^{-1} NEG (S)
45S	40 ls^{-1}	DX	Noble diode XHV	4V	Vertical DN63	VR	Varian StarCell®			N1	100 ls^{-1} NEG (S)
75S	75 ls^{-1}	TR	Triode	4D	DN63/DN40	FI	Fisher Interlock			N2	200 ls^{-1} NEG (S)
100L	100 ls^{-1}			6S	Single DN100					N3	300 ls^{-1} NEG (S)
200L	200 ls^{-1}			62	DN100/DN40					TSPC	TSP with cryoshroud (L)
300L	300 ls^{-1}			6D	Double DN100					TSPA	TSP with ambient shroud (L)
				8S	Single DN160					NG	400 ls^{-1} NEG (L)
				8D	Double DN160						

Technical data

	Units	5S	10S	25S	45S	75S	100L	200L	300L
Pumping speed		4-5	8-10	15-20	30-40	40-75	80-100	160-200	240-300
PORT OPTION									
DN40 (2.75”) (1)		2V	2H	2V, 2H or 2D		2V or 2D			
DN63 (4.5”) (2)				4V or 4D					
DN100 (6”) (3)						6S or 62	6S, 6D		
DN160 (8”) (4)								8S, 8D	8S, 8D
ELEMENT CHOICE									
TiTan CV (Diode)		●	●	●	●	●	●	●	●
TiTan DI (Noble Diode)		●	●	●	●	●	●	●	●
TiTan CVX (Diode XHV)				●	●	●	●	●	●
TiTan DIX (Noble Diode XHV)				●	●	●	●	●	●
TiTan TR (Triode)				●	●	●	●	●	●
FEEDTHROUGH CHOICE									
SC 10kV SAFECONN		●	●	●	●	●	●	●	●
OP Perkin Elmer				●	●	●	●	●	●
OV Old Varian			●	●	●	●	●	●	●
VR Varian StarCell ®				●	●	●	●	●	●
FI Fisher Interlock			●	●	●	●	●	●	●
Internal heater option		●	●	●	●	●	●	●	●
Internal TSP/NEG option (5)				●	●	●	●	●	●
Weight	kg (lbs)	2.3 (5)	6 (13)	9 (20)	16 (34)	22 (48)	29 (65)	50 (112)	66 (145)
Shipping weight	kg (lbs)	2.8 (6)	8 (17)	11 (24)	18 (39)	25 (55)	47 (105)	69 (152)	89 (195)
Ultimate pressure	mbar	$<1 \times 10^{-11}$							
Starting pressure	mbar	$<1 \times 10^{-3}$							
Lifetime (hrs at 1×10^{-6} mbar)	hours	Diode/Noble Diode 50,000; Triode 80,000							
Operating bake temp	°C	200	250						
Maximum bake temp (6)	°C	450							
Dimensions (L x W x D)	mm	106 x 85 x 81	200 x 153 x 79	202 x 125 x 130	209 x 251 x 130	277 x 242 x 130	326 x 128 x 252	325 x 413 x 233	325 x 413 x 337

(1) 2V = 2” top port; 2H = 2” side port; 2D = double ports (top and side)
(2) 4V = 4” top port; 4D = 4” top port and 2” side port
(3) 6S = single 6” port; 62 = 6” top port and 2” side port; 6D = double 6” ports (top and bottom)
(4) 8S = single 8” port; 8D = double 8” ports (top and bottom)
(5) Extra side or bottom port required
(6) Magnets removed

10S

45S

100L

300L

Images not to scale

Titanium Sublimation Pumps (TSP)

Titanium Sublimation Pumps (TSPs) are often used in combination with ion pumps or independently to remove reactive gases from the vacuum environment. Combined with an ion pump, the TSP allows for low ultimate pressures in a shorter amount of time. All TSP components are bakeable to 400 ˚C.

TSPs operate by heating a titanium filament and subliming (converting from solid to gas phase) titanium molecules onto a surface. Sublimed titanium molecules are then available to chemically react with reactive gases, like oxygen and nitrogen, and disassociate and diffuse hydrogen. TSPs can operate from 10^{-5} to 10^{-12} mbar and have pumping speeds in excess of 10,000 ls^{-1} of hydrogen.

PRODUCT FEATURES

TSP FILAMENT CARTRIDGE

The filament cartridge is mounted on a 2- 3/4" CFF (DN40). The feedthrough supports three titanium-molybdenum filaments and a return path for ground isolation. Each filament contains 1.5 grams of usable titanium and averages 20 hours of operation.

LIQUID CRYOSHROUD

The liquid cryoshroud consists of a double walled, type 304L stainless steel cylinder with two liquid nitrogen feedthroughs (.375 in. diameter) with flare type fittings. It provides 1578 cm^2 (245 in^2) of liquid nitrogen cooled surface area that provides pumping speeds up to 12,000 ls^{-1} for hydrogen (see table). The shroud is mounted on an 8 in. CFF (DN160).

AMBIENT SPUTTER SHIELD

The ambient sputter shield economically maximizes surface area when cooling is not practical or possible. It provides 827cm^2 (128 in^2) of ambient temperature surface area that provides pumping speeds up to 2200 ls^{-1} for hydrogen (see table). The shield is mounted on an 8 in. CFF (DN160) or a 6 in. CFF (DN100).

Technical data

Typical TSP pumping speeds	Area	Temperature	H_2 Rate	H_2 Speed	CO Rate	CO Speed	H_2O Rate	H_2O Speed
	cm^2/$inch^2$	°C	ls^{-1} / cm^2	ls^{-1}	ls^{-1} / cm^2	ls^{-1}	ls^{-1} / cm^2	ls^{-1}
Liquid cryoshroud (8")	709/110	20	2.6	1843	8.2	5814	7.3	5176
	1578/245 (1)	-195	17	12053	11	7799	14.6	23039
Ambient sputter shield (8")	827/128	20	2.6	2150	8.2	6780	7.3	6037
Ambient sputter shield (6")	621/96	20	2.6	1614	8.2	5092	7.3	4533

(1) applies to H_2O speed only

Ordering information

Product description	Order no.
TSP cartridge 3 filaments 2-3/4" CFF	G360819
TSP ambient sputter shield 6" CFF	G360190
TSP ambient sputter shield 8" CFF	G360044
TSP liquid cryoshroud 8" CFF	G360051

Product description	Order no.
1.5 metre cable with MS connectors	MSHC1MS
3 metre cable with MS connectors	MSHC3MS
6 metre cable with MS connectors	MSHC6MS
10 metre cable with MS connectors	MSHC10MS

Non-evaporable Getter Pumps (NEG)

NEGs are reactive metals that have been pressed onto solid substrates or sintered into discs. The amount of material used controls the speed and capacity of the NEG pump, but typically ranges from 50 to 3,500 ls^{-1} of hydrogen. As NEGs become saturated with gases, they can be reactivated without venting to atmosphere. Their prime advantage is their ability to pump for extended periods without the need for power.

NEGs are ideal for pump down, stay down applications and can be used to boost the performance of an ion pump or as a standalone pump. They are ideal for UHV applications due to their compact size and high H_2 pumping speed. They are not suitable for applications that cycle up to atmospheric pressure regularly as this will saturate the surface and they can only be reactivated a finite number of times.

N50

N100

N200

N300

N400

Technical data

	Units	N50	N100	N200	N300	N400
Flange		DN40 (2.75") CFF				
Total mass	kg (lbs)	0.48 (1.05)	0.54 (1.19)	0.75 (1.65)	0.8 (1.79)	0.85 (1.88)
Alloy composition		Zr (70%),V (24.6%), Fe (5.4%)				
Getter mass	g	31.5	58	108	144	180
Getter surface	cm^2	187	348	642	856	1070
H_2 pumping speed	ls^{-1}	55	106	208	312	412
CO pumping speed	ls^{-1}	27	51	94	125	156
H_2 sorption capacity	Torr l	630	1170	2160	2880	3600
CO (25 °C) sorption capacity	Torr l	0.1	0.2	0.4	0.6	0.8
CO total sorption capacity	Torr l	284	526	972	1296	1620
Insertion length	mm	46	61	89	110	130
Diameter	mm	34				

Ordering information

Product description	Order no.
50 ls^{-1} NEG cartridge pump 2-3/4" CFF	GN50
100 ls^{-1} NEG cartridge pump 2-3/4" CFF	GN100
200 ls^{-1} NEG cartridge pump 2-3/4" CFF	GN200
300 ls^{-1} NEG cartridge pump 2-3/4" CFF	GN300

Product description	Order no.
400 ls^{-1} NEG cartridge pump 2-3/4" CFF	GN400
1 metre cable with MS connectors	MSS1N100
3 metre cable with MS connectors	MSS3N100
6 metre cable with MS connectors	MSS6N100

Digitel™ Gamma pump controllers

The DIGITEL™ family of ion pump controllers offers the right balance of performance, power and protection.

Digitel™ SPCe small pump controller

The SPCe is a versatile way to fully operate a single ion pump. An LCD pressure/current/voltage display along with standard serial communications makes the SPCe able to accommodate the needs of basic and advanced users.

Digitel™ QPC quad pump controller

The new QPC controller offers adjustable output voltage, nano ampere resolution plus up to four independent power supplies, allowing for high current control of up to four ion pumps independently. It has an easy-to-read colour touchscreen LCD display that simultaneously displays pressure, current, and voltage and includes serial and Ethernet communications as standard.

Digitel™ TSP/NEG controller

The TSP/NEG controller has an easy-to-read touchscreen LCD display that displays all manual or programmed firing parameters. Manual operation is as simple as pressing one button. Programming is just as easy by viewing all programming options on one screen. The TSP/NEG controller can operate up to 8 TSP filaments or 2 NEG pumps.

Technical data

	Units	SPCe	QPC	TSP/NEG
INPUT POWER				
Voltage		90-240 V a.c. or 24 V d.c.	90-240 V a.c.	90-130 or 200-240 V
Frequency	Hz	48-62		
OUTPUT POWER				
Independent outputs		1	1 to 4	1
Open circuit voltage		3000-7000 V d.c. (+/- configurable)		+17 V a.c.
Current (maximum)	mA	50	125	55000
Watts (maximum)	W	50	125	800
Resolution		1 nA	1 nA	0.1 A
High voltage connections		1 10 kV SHV or Fischer	1-4 10 kV SHV or Fischer	1-2 MS style, configurable
Display type		LCD	Wide VGA colour touchscreen LCD	1/4 VGA touchscreen LCD
Readouts		Pressure, current, voltage and programmable options		Current, on-time and programmable options
ANALOG OUTPUTS				
Voltage		Linear, configurable		
Current/pressure		Linear or logarithmic, configurable		
Setpoints		One relay, one TTL	Four relay, four TTL	
Communications		Local/Remote/Full Ethernet Serial: 232, 422, 485		
Weight	kg (lbs)	1.5 (3.3)	9.5 (21)	16.8 (37)
Size		2U high, 1/4 rack wide 313 mm (12.3") deep	3U high, 1/2 rack wide 438 mm (17.2") deep	
Additional features		SAFECONN	SAFECONN	Manual, programmed or remote control
		AUTOSTART/AUTORUN	AUTOSTART/AUTORUN	TSP enable
		High voltage enable	High voltage enable	
		Fowler-Nordheim calibration		
		High-pot capability		

Ordering information

Controllers:

Type
- SPCe Small pump controller
- QPC Quad pump controller
- TSP TSP/NEG controller

HV polarity
- P Positive (CV/DI)
- N Negative (TR)

Connections/Channels
- 1 One output (ALL)
- 2 Two outputs (QPC/TSP)
- 3 Three outputs (QPC)
- 4 Four outputs (QPC)
- 0 Remote connection (TSP)

Communications
- E Ethernet (SPCe/TSP)
- S Serial (SPCe)
- S Serial/Ethernet (QPC)
- 2 RS232 (TSP)
- 4 RS422 (TSP)
- H RS485 Half (TSP)
- F RS485 Full (TSP)

TSP/NEG control
- NA Not available (SPCe)
- NI Not installed (QPC)
- N None (TSP)
- ST Remote TSP control (TSP)
- DT Dual remote TSP control (TSP)
- SN Remote NEG control (TSP)

	Not needed for TSP	Not needed for TSP	Not needed for TSP				

HV channels
- 1 One HV channel (SPCe/QPC)
- 2 Two HV channels (QPC)
- 3 Three HV channels (QPC)
- 4 Four HV channels (QPC)

Connector style
- S 10kV SHV
- F Fischer

Input voltage
- U1 110V, USA (ALL)
- U2 220V, USA (ALL)
- E2 230V, Europe (ALL)
- K2 240V, UK (ALL)
- A2 230V, Australia (ALL)
- B Bare 24V wire (SPCe/QPC)

Remote enable
- S Standard (SPCe/QPC)
- N None (TSP)
- H High Voltage Enable (TSP)

Ion pump cables:

Controller connector
- SCP SAFECONN (Silicone)
- FB Fischer Interlock (Silicone)
- 10K 10kV SHV (Teflon)
- N None (ALL)

Cable type
- SC Silicon
- TF Teflon

Cable length
- 3 3 m
- 6 6 m
- 10 10 m
- 30 30 m
- 50 50 m
- 75 75 m
- 100 100 m

Pump connector
- SC SAFECONN (Silicone)
- FI Fischer Interlock (Silicone)
- SCO Original SAFECONN (Silicone)
- OV Original Varian (Silicone)
- VR Varian Starcell (Silicone)
- 5K 5kV SHV (Silicone)
- 10K 10kV SHV (ALL)
- VM90 Mini FT Connector (Silicone)
- OP Perkin Elmer (Teflon)
- N None (ALL)

VACUUM MEASUREMENT

Steps to choosing the right vacuum gauge

1 2 3 4

1 Determine the range of pressures using the chart below to guide you.

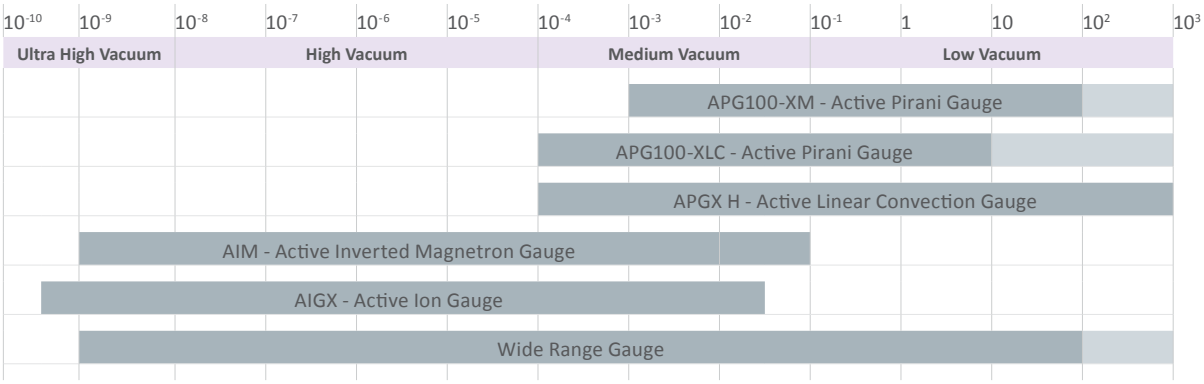

The dark grey shading indicates the primary accuracy range for the specified gauge.
The light grey 'operating range' indicates the pressure range where the gauge can be used but will not provide accurate readings.

2 Choose your gauge

APG100 -
Active Pirani Gauge

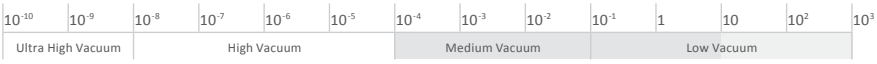

APG100 series Active Pirani vacuum gauges are available in 2 models. The APG100-XM is the standard model and measures to 10^{-3} mbar, the APG100-XLC is a corrosion resistant version with measurement to 10^{-4} mbar. Both gauges feature compact size for easy installation, a linear output and a replaceable sensor tube. These gauges are compatible with all Edwards TIC instrument controllers and other Active gauge controllers and displays.

Technical data	
Pressure range	APG100-XM = 10^{3} to 10^{-3} mbar APG100-XLC = 10^{3} to 10^{-4} mbar
Accuracy	APG100-XM = <100 mbar APG100-XLC = <10 mbar typically +/- 15%
Max overpressure	10 bar absolute (145 psi)
Temperature range Operating Storage	 +5 to +60 °C -30 to +70 °C

Active Pirani gauges	Order no.
APG100-XM Atmosphere to 10^{-3} mbar NW16 flange	D02601000
APG100-XM Atmosphere to 10^{-3} mbar NW25 flange	D02602000
APG100-XLC Atmosphere to 10^{-4} mbar corrosion resistant NW16 flange	D02603000
APG100-XLC Atmosphere to 10^{-4} mbar corrosion resistant NW25 flange	D02604000

APGX H - Active Linear Convection Gauge

The Active Linear Convection Vacuum Gauge has a wide measuring range from 1333 to 3 x 10^{-4} mbar. The use of convection technology ensures accuracy and sensitivity are maintained to the top of the pressure range compared to conventional Pirani gauges, which lose accuracy above 100 mbar. The gauge is compact and may be mounted in any orientation, simplifying installation where space is limited.

Technical data	
Pressure range	1333 to 3 x 10^{-4} mbar
Accuracy	Typically +/- 15%
Max overpressure	10 bar absolute (145 psi)
Temperature range Operating Storage	 +5 to +60 °C -30 to +70 °C

APGX H - Active Linear Convection Gauges	Order no.
APGX-H NW16 Aluminium	D02391000
APGX-H NW16 Stainless Steel	D02395000
APGX-H NW25 Stainless Steel	D02392000
APGX-H 1/8" NPT Stainless Steel	D02396000

AIM - Active Inverted Magnetron Gauge

Edwards Active Inverted Magnetron (AIM) Gauges provide accurate measurement over the vacuum range of 1 x 10^{-2} to 1 x 10^{-9} mbar. These gauges have proved to be rugged and reliable in a wide range of applications, ranging from scientific instruments to industrial processes.

The AIM-X Gauge is an inverted magnetron gauge head and gauge controller combined into a single compact unit, and features a linear output for easy integration with a computer or PLC.

The XL variants have a very low external magnetic field, these are ideally suitable for use with sensitive analytical instruments or in applications where the gauge needs to be mounted in close proximity to a turbomolecular pump.

Technical data	
Pressure range	10^{-2} to 10^{-9} mbar
Accuracy	Typically +/- 30%
Max overpressure	10 bar absolute (145 psi)
Temperature range Operating Storage	 +5 to +60 °C 0 to +70 °C

Active Inverted Magnetron gauges	Order no.
AIM-X-NW25	D14642000
AIM-XL-NW25	D14645000
AIM-X-DN40CF	D14662000
AIM-XL-DN40CF	D14665000

AIGX - Active Ion Gauge

The Active Ion Gauge (AIGX) is a compact active ion gauge with dual yttria coated iridium filaments, a wide measuring range from 6.6 x 10^{-2} to 6.6 x 10^{-10} mbar and a 1 Volt/decade linear output. The AIGX incorporates all benefits of the industry standard active gauging concept, with integral electronics and replaceable tube. The gauge has a degas facility and includes features to protect and extend the life of the filaments. The AIGX benefits from extremely low emissions of charged particles, which makes it an excellent choice for processes where background noise is undesirable.

Technical data	
Pressure range	6.6 x 10^{-2} to 6.6 x 10^{-10} mbar
Accuracy	Typically +/- 15%
Max overpressure	10 bar absolute (145 psi)
Temperature range Operating Storage	 0 to +40 °C -30 to +70 °C

AIGX - Active Ion Gauge	Order no.
AIGX-S NW25	D04850000
AIGX-S DN16CF	D04851000
AIGX-S DN40CF	D04852000

WRG - Wide Range Gauge

The Wide Range Gauge (WRG) family offers the capability of single port pressure measurement in the range atmosphere to 10^{-9} mbar, with a linear output. It's a compact solution, halving the space and connectivity hardware requirement, which can be all important in many applications. The WRG has many novel features, including a patented striker, push-button calibration and set point controls and comprehensive diagnostics. The WRG is a cost-effective vacuum management solution when used either with a Edwards controller or directly integrated into the vacuum system controls.

Technical data	
Pressure range	10^{3} to 10^{-9} mbar
Accuracy	Typically +/- 15% at <100 mbar +/- 30% at <10^{-3} mbar
Max overpressure	10 bar absolute (145 psi)
Temperature range Operating Storage	 +5 to +60 °C 0 to +70 °C

Wide range gauges	Order no.
WRG NW25 Stainless Steel	D14701000
WRG DN40CF Stainless Steel	D14703000
WRG-SL NW25	D14711000

3 Choose the cable length required

Cables include FCC68/RJ45 compatible connections at both ends.

Connection cable options	Order no.
0.5 m	D40001005
1 m	D40001010
3 m	D40001030
5 m	D40001050
10 m	D40001100

4 Choose display option

Active Digital Controller

The Active Digital Controller (ADC) is a compact single gauge controller and display. It features a bright LED display and simple push button controls. The ADC automatically recognises compatible Edwards gauges, loads the appropriate look-up table and displays the pressure in commonly used vacuum units.

- Plug and measure operation
- Bright LED display for clear visibility
- Choice of display units - mbar, Torr, Pascal
- Supports APG100, APGXH and WRG gauges

Enhanced Active Digital Controller

The Enhanced Active Digital Controller (ADC) is a compact dual gauge controller and display. It features a bright LED display and simple push button controls for two compatible Edwards gauges. The Enhanced ADC automatically loads the appropriate look-up table and displays the pressure in commonly used vacuum units.

- Controls two active gauges of the same type
- 2 set-point relays
- Simple push button control
- RS232 interface and analog output
- Supports APG100, APGXH, WRG and AIM gauges

TIC Controller

The TIC instrument controller offers comprehensive control and display of up to 6 compatible Edwards gauges. Intuitive user interface, 6 set points and full Windows Software for control and data logging functionality.

- Universal controller for up to 6 active gauges
- Compact design
- Clear, easy-to-use graphical user interface
- Serial communication Windows™ PC program including data logger, plus analogue outputs
- RS232 interface and analog output
- Supports APG100, APGXH, WRG, AIM and AIGX gauges

Controller	Order number	Max no. of gauges	No. of setpoints	Windows software	Data logging
TIC controller (3 gauge)	D39700000	3	3	Yes	Yes
TIC controller (6 gauge)	D39701000	6	6	Yes	Yes
Active Digital Controller (ADC)	D39590000	1	0	No	No
Enhanced Digital Controller (eADC)	D39591500	2	2	No	No

Vacuum components and flange fittings

When you buy vacuum pump components from Edwards, you can expect the quality and service that only a leading international supplier can provide. We understand that flanges and fittings are critical to the performance of your vacuum system, and supply only high quality products which meet the highest specification.

Convenience of supply:
Single source supplier, able to provide the complete system solution either online or via local supply centres.

High quality and reliability:
Precision material control ensures a dependable vacuum performance on sensitive or demanding applications.

Comprehensive choice:
Complete range for all common flange sizes in aluminium and stainless steel.

NW flange assembly

NW fittings, otherwise known as ISO-KF, are the industry standard for many applications in the low to high vacuum range. They are ideal for achieving dependable cost effective performance down to 10^{-7} mbar across a range of applications from light to harsh duty. A simple fastening method means that systems can be easily assembled and a leak tight vacuum seal is quickly achieved.

- Manufactured to ISO 2861 and DIN 28403 standards
- Nominal diameters 10 mm to 50 mm
- Use with either elastomer or formed aluminium seals
- Choice of clamp type depending on application, access, convenience and cost
- For use in high-vacuum applications: pressures $>10^{-7}$ mbar

This brochure details our most popular flange components and valves. Please refer to our full Product Catalogue or visit www.edwardsvacuum.com for a complete list if there are any components which are not listed here.

Technical data

Operating pressure range (absolute)	Minimum	Maximum
Products are designed for vacuum applications however some will withstand a small over-pressure, this is indicated in the table below where appropriate		
"C" clamp and centring ring	10^{-7} mbar	1 bar
Stainless steel clamping ring and Co-seal	10^{-7} mbar	10 bar
Stainless steel clamp and metal seal	10^{-8} mbar	3 bar
Stainless steel clamp and Co-seal (all sizes)	10^{-7} mbar	10 bar
Polymer and aluminium clamps and Co-seal NW10 to NW25 NW40 to NW50	 10^{-7} mbar 10^{-7} mbar	 10 bar 10 bar
NW trapped O ring	10^{-7} mbar	10 bar
ISO trapped O ring	10^{-7} mbar	1 bar
O ring and centring ring (vacuum use only)	10^{-7} mbar	1 bar
Bellows	10^{-7} mbar	1 bar
Flexible pipelines (1)	10^{-7} mbar	1.5 bar
Braided flexible pipelines (1)	10^{-7} mbar	10 bar
(1) Depends on size		

Operating temperature	
Polymer Co-seal	-10 to 80 °C
Aluminium Co-seal and nitrile seal	-10 to 100 °C
Aluminium Co-seal and fluoroelastomer seal	-10 to 150 °C
Polymer centring ring and nitrile O ring	-10 to 100 °C
Polymer centring ring and fluoroelastomer seal	-10 to 125 °C
Nitrile O ring	-10 to 100 °C
Fluoroelastomer O ring	-10 to 150 °C
Polymer clamp Constant vacuum use Intermittent vacuum use	 -10 to 100 °C -10 to 125 °C
Stainless steel clamping ring	-10 to 125 °C
Aluminium swing/hinge clamp	-10 to 200 °C
Stainless steel clamp	-10 to 200 °C

The maximum temperature for continuous operation with fluoroelastomer is 150 °C. It may be intermittently baked at 200 °C.

Stainless steel equivalents		
AISI number	DIN standard	**Composition**
304L	1.4306	X2 CrNi 19 10
316L	1.4404	X2 CrNiMo 17 13 2

Chemical resistance

Material	Generally resistant to:	Generally attacked by:
Nitrile Butadiene Acrylonitrile copolymer	Many hydrocarbons fats, oils greases, hydraulic fluids	Ozone, ketones, esters, aldehydes, chlorinated and nitro hydrocarbons
Neoprene Chloroprene polymer	Moderate chemicals and acids, ozone, oily fats, greases, many oils and solvents	Strong oxidizing acids and esters, ketones, chlorinated aromatic and nitro hydrocarbons
Fluoroelastomer Fluorocarbon polymer	All aliphatic, aromatic and halogenated hydrocarbons, acids, animal and vegetable fats	Ketones, low molecular weight esters and nitro containing compounds
Aluminium	Organic acids, fatty acids, freons, nitric acid	Strong acids, alkalis chlorinated solvents, mercury
Stainless Steel	Organic acids, alkalis, nitric acid. Sulphuric acid (10%)	Oxidizing chlorines, some organic acids, hydrochloric acid, hydrofluoric acid
Polymer Liquid crystal polymer	Organic acids, glycols, chlorinated solvents, ketones, mineral and oxidising acids, caustic solutions freons	Sodium hydroxide, sulphuric acid (70%)

This information is provided as a general guide only. Further guidance should be sought with respect to specific chemicals and their applications.

Our components and flange fittings are designed to be leak-tight across the range of vacuum applications, and not intended to provide full structural support. When designing any vacuum system, it is essential that consideration is given to the static and dynamic loads imposed on each connection. If necessary, additional mechanical support should be provided and built into the design. Regular inspection including leak-checking and, where appropriate, periodic replacement of components should be considered to ensure system efficiency and safety is maintained.

CLAMPS, TUBES, VALVES AND HOSE ADAPTORS

Clamps shown include our standard stainless steel clamping ring and our premium products - swing clamps and hinge clamps - both of which are available in polymer and aluminium and are easier to use than the clamping ring.

The speedivalve is our best-selling manually operated valve and is simple to use. It incorporates indication of status and is available with either nitrile or fluoroelastomer diaphragm.

PVC hose clamp		
Tube to fit	**Clip ID**	**Order number**
NW10/16	25 mm	C10512408
NW20/25	36 mm	C10514408
NW32/40	50 mm	C10516408

PVC hose adaptor		
Flange size	**Hose ID in (mm)**	**Order number**
NW10	1/2 in (12.7)	C10504081
NW16	1/2 in (12.7)	C10504104
NW16	3/4 in (19.1)	C10504105
NW25	1 in (25.4)	C10504225
NW40	1 1/2 in (38.1)	C10504326

Hinged clamp		
Flange size	**Order number**	
	Aluminium	Polymer
NW10/16	C10512402	C10512303
NW20/25	C10514402	C10514303
NW32/40	C10516402	C10516303

Stainless steel clamping ring	
Flange size	**Order number**
NW10/16	C10512401
NW20/25	C10514401
NW32/40	C10516401

Swing clamp		
Flange size	**Order number**	
	Aluminium	Polymer
NW10/16	C10512403	C10512304
NW20/25	C10514403	C10514304
NW43/40	C10516403	C10516404

Reinforced PVC tube 1 m lengths		
D	Order number	
	Rest of World	N. America
1/2 in	N/A	A63012220
3/4 in	H02100016	U3002173
1 in	H02100017	A63012343
1 1/2 in	H02100018	430000484

Reinforced PVC tube with NW flanges and hose clamps		
Flange	Order number	
	500 mm	1000 mm
NW16	C10512055	C10512155
NW25	C10514055	C10514155
NW40	C10516055	C10516155

SP Speedivalve diaphragm isolation valve		
Flange size	Order number	
	Nitrile diaphragm	Fluoroelastomer diaphragm
NW10	C33105000	C33155000
NW16	C33205000	C33255000
NW25	C33305000	C33355000
NW40	C33405000	C33455000

Flexible pipelines		
Flange size	Order number	
	250 mm long	500 mm long
NW10	C10511285	C10511286
NW16	C10512285	C10512286
NW25	C10514285	C10514286
NW40	C10516285	C10516286

Blanking flange		
Flange size	Order number	
	Aluminium	Stainless steel
NW10	C10511368	C10511366
NW16	C10512368	C10512366
NW25	C10514368	C10514366
NW40	C10516368	C10516366

O RINGS, ELBOWS, CROSS PIECES, T PIECES AND REDUCERS

This page shows some of our other common hardware components and, in particular, our range of NW O ring based seals. These include our standard O ring with centering ring available in either nitrile or fluoroelastomer and with polymer, aluminium and stainless steel carriers.

Material selection depends on application and outgassing, operating temperature and leak tightness requirements. Co-Seals keep the carrier out of the vacuum and thus have the added benefit of eliminating crevices and trapped volumes that can lead to instability and gas bursts. The centering rings are only designed for vacuum applications. Where some positive pressure may be seen (such as exhaust lines), Co-Seals and trapped O rings should be used. They have carriers which support the O ring on both sides, making them ideal for both vacuum and positive pressure use.

Centering ring (Nitrile O ring)			
Flange size	**Order number**		
	Polymer carrier	Aluminium carrier	Stainless steel carrier
NW10	C10511393	C10511398	C10511396
NW16	C10512393	C10512398	C10512396
NW25	C10514393	C10514398	C10514396
NW40	C10516393	C10516398	C10516396

Centering ring (Fluoroelastomer O ring)			
Flange size	**Order number**		
	Polymer carrier	Aluminium carrier	Stainless steel carrier
NW10	C10511394	C10511397	C10511395
NW16	C10512394	C10512397	C10512395
NW25	C10514394	C10514397	C10514395
NW40	C10516394	C10516397	C10516395

Trapped O ring (Fluoroelastomer)	
Flange size	**Order number**
NW10/16	C10512490
NW20/25	C10514490
NW32/40	C10516490

Co-Seal (Nitrile O ring)		
Flange size	**Order number**	
	Polymer carrier	Aluminium carrier
NW10/16	B27158426	B27158480
NW20/25	B27158447	B27158490
NW32/40	B27158454	B27158500

Co-Seal (Fluoroelastomer O ring)		
Flange size	**Order number**	
	Polymer carrier	Aluminium carrier
NW10/16	B27158427	B27158481
NW20/25	B27158448	B27858491
NW32/40	B27158453	B27858501

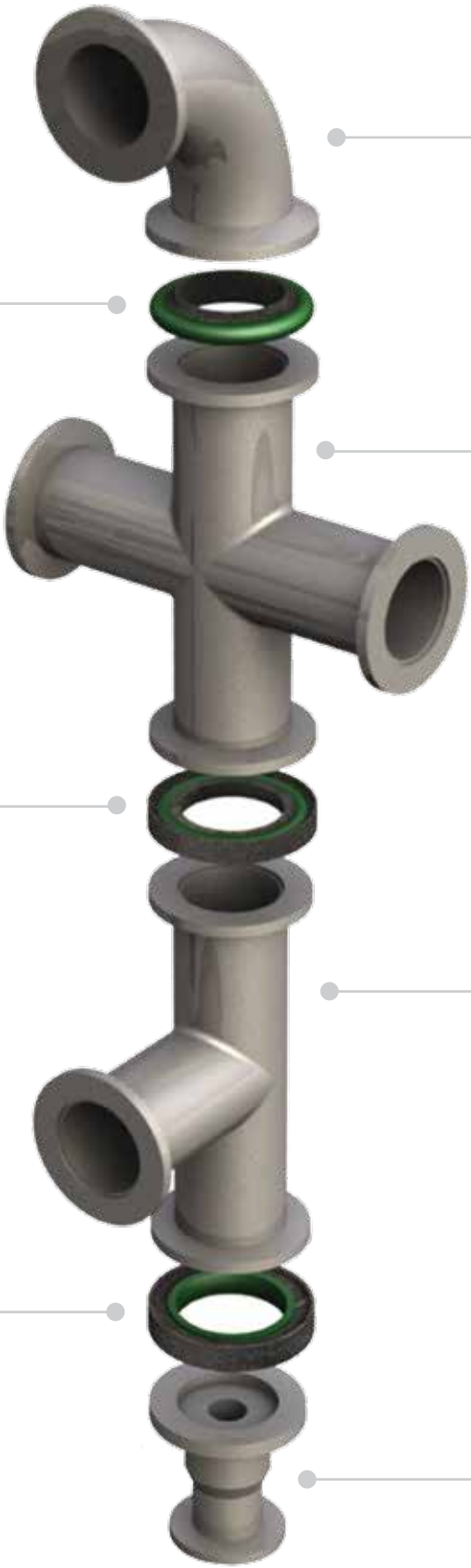

90° elbow		
Flange size	Order number	
	Aluminium	Stainless steel
NW10	C10511410	C10511420
NW16	C10512410	C10512420
NW25	C10514410	C10514420
NW40	C10516410	C10516420

Cross piece			
Flange size	Length	Order number	
		Aluminium	Stainless steel
NW10	60 mm	C10511412	C10511422
NW16	80 mm	C10512412	C10512422
NW25	100 mm	C10514412	C10514422
NW40	130 mm	C10516412	C10516422

T-piece			
Flange size	Length	Order number	
		Aluminium	Stainless steel
NW10	60 mm	C10511412	C10511421
NW16	80 mm	C10512412	C10512421
NW25	100 mm	C10514412	C10514421
NW40	130 mm	C10516412	C10516421

Reducing piece		
Flange size	Order number	
	Aluminium	Stainless steel
NW25/10	C10514436	C10514446
NW25/16	C10514437	C10514447
NW40/16	C10516438	C10516448
NW40/25	C10516439	C10516449

Support you can trust

At Edwards we pride ourselves on developing service solutions that deliver optimum performance and up-time to our customers. Convenience, quality and value are at the heart of everything we do. Whether you are looking for immediate help and advice or require a long-term total service partner, we make the performance of your business our priority.

Well-maintained systems last longer

Maximise the lifetime of your product by servicing your own products regularly using original parts and tooling. Edwards can support you with spares, maintenance kits, tools and training. Combining the reliability of original spare parts with quality tools means you are well on the way to achieving years of trouble-free operation.

Comprehensive repair solutions

When products require more than just routine maintenance, Edwards offer a complete suite of Repair, Overhaul and 'ReManufacturing' solutions. All are covered by the assurance of the manufacturer's guarantee. We offer a fixed price servicing for swift response and simple budgeting, or a more flexible pricing, structured to reflect the specific needs of the repair. All 'ReManufacturing' services are completed to the highest standards using the proven assembly and test procedures developed in our factories.

If turnaround is critical a service exchange product can usually be dispatched to you from local stock within hours.

Effective managed maintenance

For any business the ability to plan ahead is key. Managed Maintenance is about easy access to the right services at the right time. Regular scheduled maintenance is crucial to identifying potential problems before they occur. Avoiding unplanned downtime is essential to achieving outstanding operational performance and lowering the total cost of ownership (TCO). Our qualified service engineers can help you monitor and maintain your vacuum system to avoid one-off costly repairs while managing service on a fixed budget as part of a Managed Maintenance agreement.

Economy without compromise

'Edwards CERTIFIED' are genuine Edwards products 'ReManufacturered' to provide a cost-effective route to expand, upgrade or replace your installations without compromising quality, reliability or performance. Like our service exchange product, 'Certified' products are tested as new and are supported by a 12 month warranty, and come with original accessories and manuals required to aid installation.

Prolonged peace of mind

Extending the new equipment warranty gives you a simple opportunity to add peace of mind to your purchase of new equipment, should a fault occur as a result of a manufacturing defect, equipment is expressly repaired or replaced. Cover is available on many of our products allowing the original factory warranty to be extended from 12 months to 2 years and beyond.

Your global partner

We understand the importance of local support. Edwards has a number of major service facilities located throughout the world, each location is supported by an extensive team of engineers and technicians to provide local, rapid response and great value service. All our service operations are conducted at the highest international standards in accordance with ISO9001 (Quality), ISO14001 (Environmental), and OHSAS18001 (Workplace safety).

Pressure Conversion Table

		mbar	bar	Torr	Pa	atm	in Hg	mm Hg	in H_2O	psi
1 mbar	=	1	1×10^{-3}	0.75	100	9.87×10^{-4}	2.95×10^{-2}	0.75	0.40	1.45×10^{-2}
1 bar	=	1000	1	750	1×10^{5}	0.987	29.53	750	402	14.5
1 Torr	=	1.33	1.33×10^{-3}	1	133	1.32×10^{-3}	3.94×10^{-2}	1	0.54	1.93×10^{-2}
1 Pa	=	1×10^{-2}	1×10^{-5}	7.50×10^{-3}	1	9.87×10^{-6}	2.95×10^{-4}	7.50×10^{-3}	4.01×10^{-3}	1.45×10^{-4}
1 atm	=	1013	1.013	760	1.01×10^{5}	1	29.92	760	4.07×10^{2}	14.7
1 in Hg	=	33.86	3.39×10^{-2}	25.4	3.39×10^{3}	3.34×10^{-2}	1	25.4	13.6	0.491
1 mm Hg	=	1.33	1.33×10^{-3}	1	133	1.32×10^{-3}	3.94×10^{-2}	1	0.54	1.93×10^{-2}
1 in H_2O	=	2.49	2.49×10^{-3}	1.868	249	2.46×10^{-3}	7.36×10^{-2}	1.868	1	3.61×10^{-2}
1 psi	=	68.95	6.89×10^{-2}	51.7	6.89×10^{3}	6.80×10^{-2}	2.036	51.7	27.68	1

Leak Rate Conversion Table

		mbar ls^{-1}	Torr ls^{-1}	atm $cm^3\ s^{-1}$	atm $ft^3\ min^{-1}$	kg hr^{-1} air (20°C)
1 mbar ls^{-1}	=	1	0.75	0.987	2.09×10^{-3}	4.28×10^{-3}
1 Torr ls^{-1}	=	1.33	1	1.32	2.80×10^{-3}	5.70×10^{-3}
1 atm $cm^3\ s^{-1}$	=	1.013	0.76	1	2.12×10^{-3}	4.33×10^{-3}
1 atm $ft^3\ min^{-1}$	=	478.1	358.7	471.9	1	2.044
1 kg hr^{-1} air (20°C)	=	234	175	231	0.489	1

Pumping Speed Units

		ls^{-1}	l min^{-1}	$ft^3\ min^{-1}$	$m^3\ h^{-1}$
1 ls^{-1}	=	1	60	2.12	3.60
1 l min^{-1}	=	0.0167	1	0.0353	0.06
1 $ft^3\ min^{-1}$	=	0.472	28.32	1	1.70
1 $m^3\ h^{-1}$	=	0.278	16.67	0.5890	1

Common Value Formulae

Conductance:

Description	Formula	Units		
Conductance	$C = \frac{Q}{(P_1 - P_2)}$	C Q $P_1 P_2$	conductance throughput upstream and downstream pressures	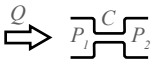

Conductance - Series:

Description	Formula	Units		
Series Conductances	$\frac{1}{C_{Total}} = \sum_{1}^{n} \frac{1}{C_n}$	C_{Total}	Total conductance of n series elements	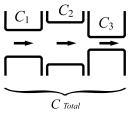

Conductance - Parallel:

Description	Formula	Units		
Parallel Conductances	$C_{Total} = \sum_{1}^{n} C_n$	C_{Total}	Total conductance of n parallel elements	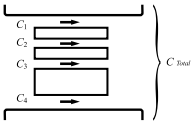

Gas Load:

Description	Formula	Units	
Outgassing rate	$Q_{Total} = \sum_{1}^{n} q_n A_n$	Q_{Total} q_n A_n	total outgassing rate (mbar.litre.sec) outgassing rate for material (mbar.litre.sec^{-1}.cm^{-2}) area of material (cm^2)

Description	Formula	Units	
Ultimate pressure	$P_{Ultimate} = \frac{Q_{Total}}{S_{Effective}}$	$P_{Ulimate}$ Q_{Total} $S_{Effective}$	ultimate pressure (mbar) total gass load on system (mbar.litre.sec^{-1}) effective pumping speed (litre.sec^{-1})

Pumping Speed:

Description	Formula	Units	
Pumping speed	$S = \frac{Q}{P}$	S Q P	pumping speed (litre.sec^{-1}) throughput (mbar.litre.sec^{-1}) pressure (mbar)

Description	Formula	Units	
Pump down time: (constant pumping speed)	$T = 2.3 \frac{V}{S} Log_{10}\left(\frac{P_1}{P_2}\right)$	T V S $P_1 P_2$	Time (seconds) Volume (litres) speed (litres.sec^{-1}) pressure (similar units)

Description	Formula	Units	
Effective pumping speed: (pump with a pipe in series)	$\frac{1}{S_{Effective}} = \frac{1}{S_{Pump}} + \frac{1}{C_{Pipe}}$	$S_{Effective}$ effective pumping speed (mbar.litre.sec^{-1}) S_{Pump} pump speed (litre.sec^{-1}) C_{Pipe} conductance of pipe (litre.sec^{-1})	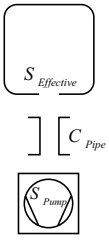 Chamber Pipe Pump

EDWARDS
GLOBAL CONTACTS

EMEA

UK +44 1444 253000

UK (local rate) 08459 212223

Belgium +32 2 300 0730

France +33 1 4121 1256

Germany 0800 000 1456

Italy +39 02 48 4471

Israel +972 8 681 0633

ASIA PACIFIC

China +86 400 111 9618

India +91 20 4075 2222

Japan +81 47 458 8836

Korea +82 31 716 7070

Singapore +65 6546 8408

Taiwan +886 3758 1000

AMERICAS

USA +1 800 848 9800

Brazil +55 11 3952 5000

Publication Number: 3601 0016 01
© Edwards Limited 2016. All rights reserved.
Edwards Ltd registered in England and Wales No. 6124750 Registered office: Innovation Drive, Burgess Hill, West Sussex RH15 9TW, UK.

Whilst we make every effort to ensure that we accurately describe our products and services, we give no warranty as to the accuracy or completeness of any information provided in this brochure.

edwardsvacuum.com