SIS100 Pre-Collaboration Meeting
Technical System: 2.8.2 Magnets

Egbert Fischer
GSI

September 15th, 2008
GSI, Darmstadt

Content

1. Basic magnet parameters of the SIS100 [2.8.2]

SIS100	Magnet	Number of magnets	nc/sc	Magnet design /type	Max. field (T), Gradient (T/m), etc.	Effective field length (m)	Bending angle(mrad) /radius (m)	*Useable horizontal / vertical aperture (mm)	Max. ramp rate (T/s,...)
2.8.2.1	***Dipole***	**108 + 1**	**sc**	**sf wf curved**	**1.9**	**3.062**	**58.18 / 52.632**	**115 / 60**	**4**
2.8.2.2	***Quadrupole***	**168 + 3**	**sc**	**superferric**	**27**	**1.3**		**135 / 65**	**57**
	Quadrupole Inj./Extr.	**4**	**sc**	**superferric**	**27**	**1.3**		**135 / 65**	
2.8.2.3	***Correction Magnets***								
2.8.2.3.1	Error Comp. Quadrupoles†	12	sc	saddle coil	0.75 T/m	0.75		150	5 T/m*s
2.8.2.3.2	Chromat. Sextupoles	48	sc	saddle coil	350 T/m2	0.5		135 / 65	2000 T/m2*s
2.8.2.3.3	Error Comp. Sextupoles†	12	sc	saddle coil	50 T/m2	0.75		150	210 T/m2*s
2.8.2.3.4	Resonance Sextupoles	12	nc	6-fold	150 T/m2	0.74		150	2000 T/m2 *s
2.8.2.3.5	Error Comp. Octupoles†	12	sc	saddle coil	2000 T/m3	0.75		150	8500 T/m3*s
2.8.2.3.6	Fast quadrupole	1	nc	4-fold	12.5 T/m	0.54		125	125 T/m*s
2.8.2.4	*Steering magnets*								
2.8.2.4.1	Comb. h/v	84	sc	saddle coil	0.3	0.5	1.5	135 / 65	1.5
2.8.2.4.2	Extraction system steerer	1	nc						
2.8.2.5	*Magnetic Septa*								
2.8.2.5.1	Injection septum	1	nc	wf	0.82	1.5	h: 69	70 / 40	
2.8.2.5.2	Lambertson septum	1	nc	wf	0.6	1	v: 5.6/166.67	30 / 40	
2.8.2.5.3	Extraction septum 1	1	nc	wf	0.35	1.5	v: 5.1	60 / 30	
2.8.2.5.4	Extraction septum 2	1	nc	wf	1	1	v: 10	70 / 35	
2.8.2.5.5	Extraction septum 3††	1	nc	wf	v: 1.85 h: 0.25	2.2	V: 40.5 h: 5	80 / 45	
2.8.2.5.6	Transfer septum 1	1	nc	wf	0.8	0.5	v: 4	40 / 40	
2.8.2.5.7	Transfer septum 2	1	nc	wf	1.57	3	v: 47.2	40 / 40	

* (horizontal x vertical) or diameter if circular

† form one magnet unit

††separate coils: vertical and horizontal

Main R&D Results: short test models

Nuclotron dipole inside cryostat:
1 - yoke end plate
2 - brackets
3 - coil end loop
4 - beam pipe
5 - helium headers
6 - suspension
7 - laminated yoke

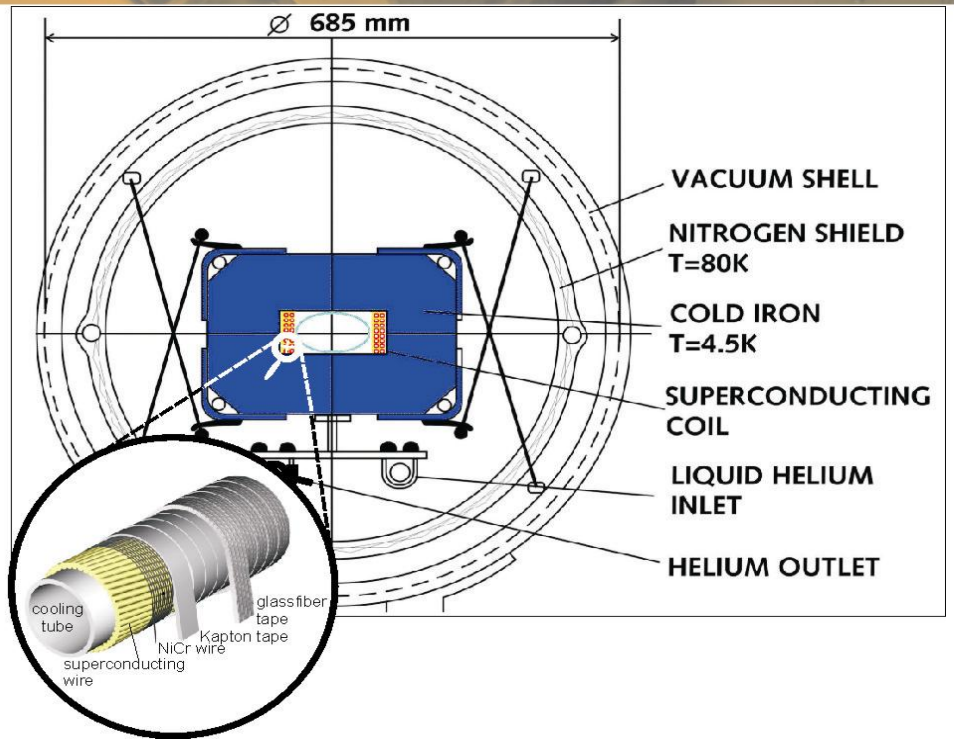

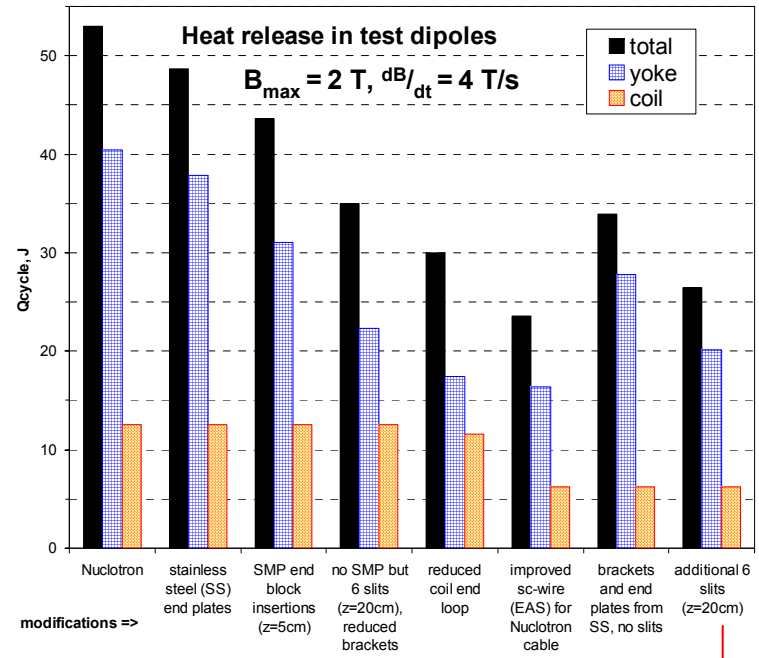

4KDP6a

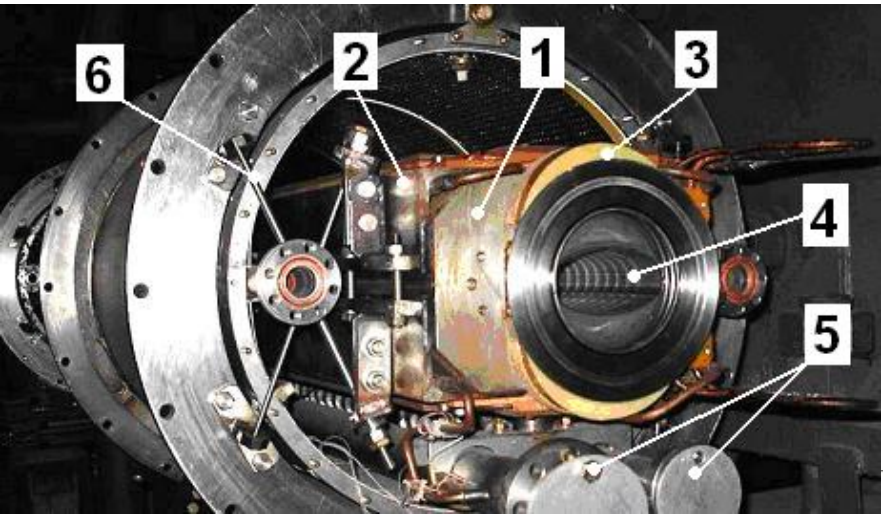

Design consequences:

- brackets, end plates made from SS
- laser cut lamination slits
- minimized coil ends
- optimized lamination geometry
- new coil package structure

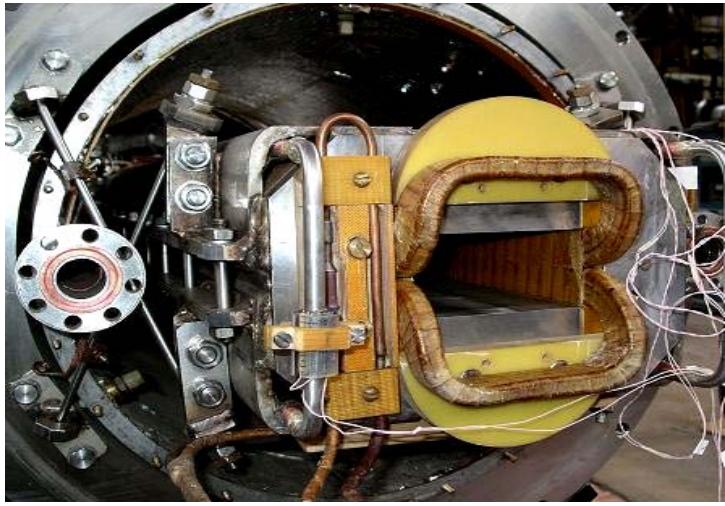

Main R&D Results: Coil mechanics

FAIR

Nuclotron cable:

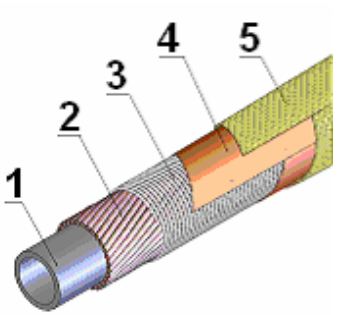

1 - Cooling tube
2 - SC wire
3 - CrNi wire
4 - Kapton tape
5 - Glasfiber tape

Analysis of:

- wire and cable design
- Insulation concept
- Winding scheme
- Technological optimization
- ANSYS Models
- Substrate: comb or block
- Model coils production (BNG)
- Mechanical tests

stress strain load tests on the complete coil winding pack:

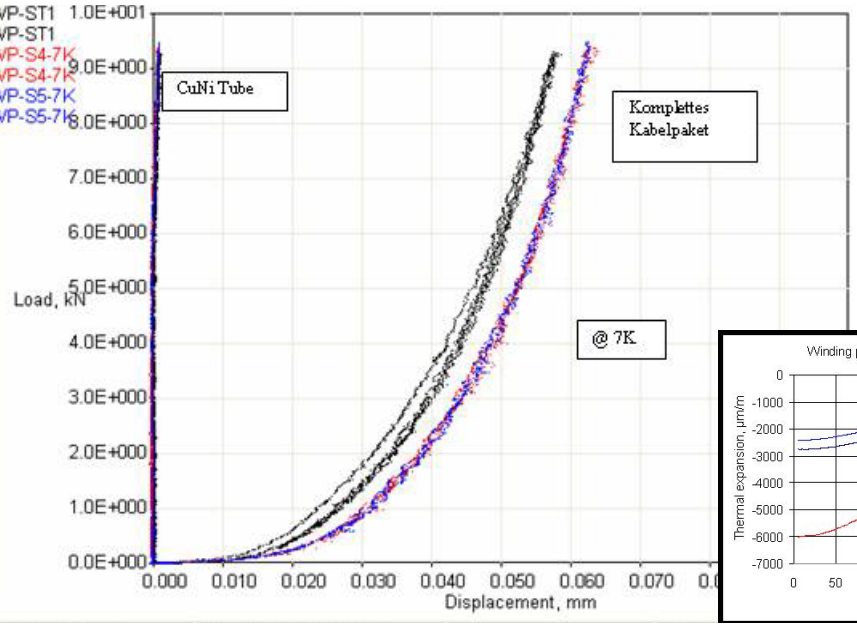

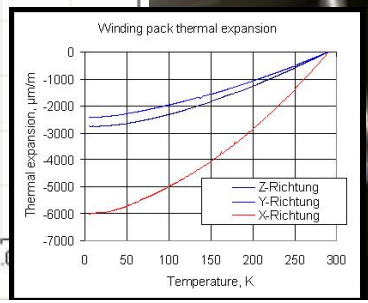

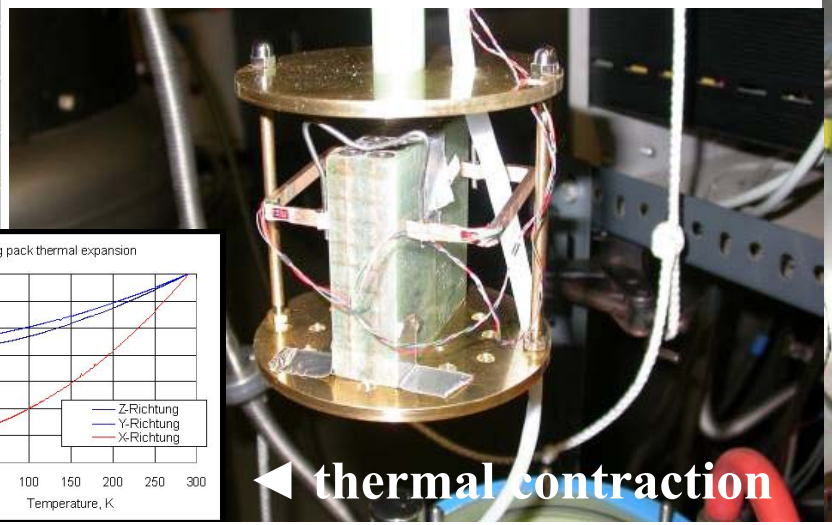

◀ thermal contraction

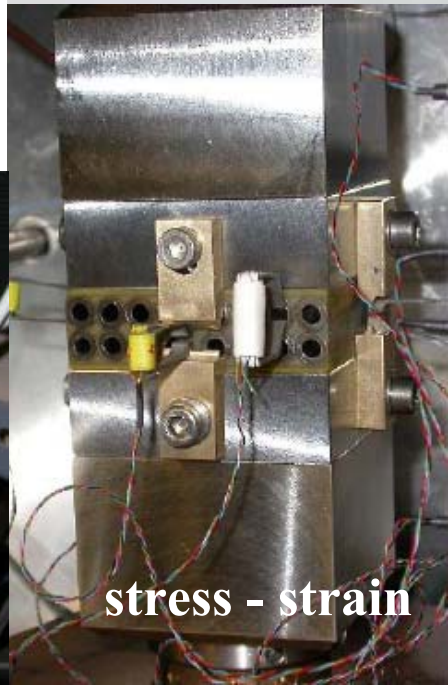

stress - strain

Main R&D Results on Nuclotron based SC Magnets

- The sources of the loss generation are understood, numerical calculations match the respective measurements
- Stainless steel end plates and brackets
- Minimized coil end loops
- Laminated and horizontally cut endblocks
- New SC wire with higher current density and lower losses
- More rigid coil structure
- Decision: design and build full size models (contracts Dec. 2006)
  - Two straight dipoles: BNG Wuerzburg (Industry), JINR Dubna (Institute)
    → different manufacturing technologies and materials
  - Quadrupole: JINR Dubna
  - Curved dipole: BINP Novosibirsk
    → "no sagitta": significant benefits for lattice design and operation

SIS 100 full size models: design parameters

		Straight dipole FBTR (March 2006)	**Curved dipole** (Oct. 2006)
B x $L_{effective}$	[Tm]	5.818	5.818
B	[T]	2.11	1.9
$L_{effective}$	[m]	2.756	3.062
Estimated L_{yoke}	[m]	2.696	3.002
Bending angle	[deg]	3 1/3	3 1/3
Radius of curvature	[m]	47.368	52.632
Aperture (h x v)	[mm]	130 x 60	115 x 60

		Quadrupole FBTR (March 2006)	**Quadrupole elongated** (Oct. 2006)
B' x $L_{effective}$	[T]	35	35
B'	[T/m]	32	27
$L_{effective}$	[m]	1.1	1.3
Estimated L_{yoke}	[m]	1	1.2
Aperture (h x v)	[mm]	135 x 65	135 x 65

SIS 100 full size model: dipole from Babcock Noell GmbH

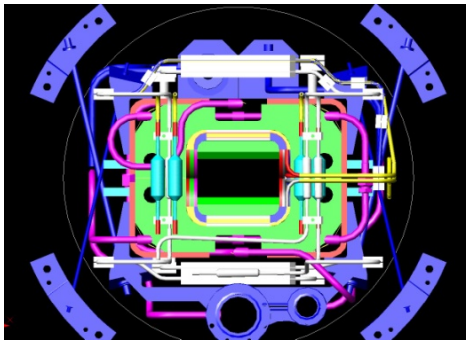

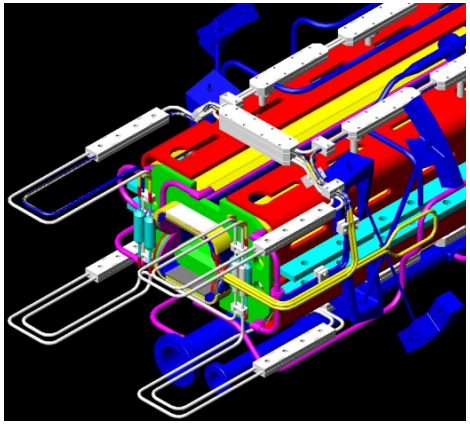

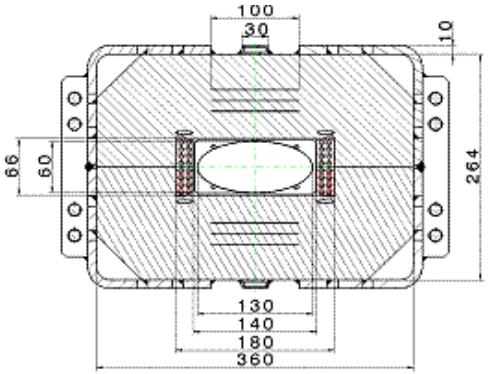

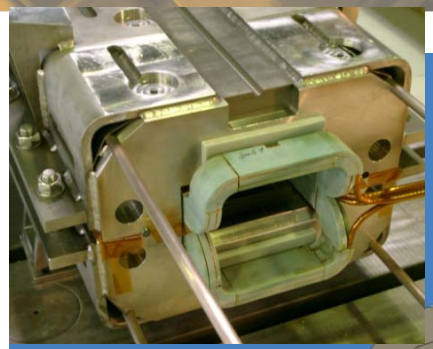

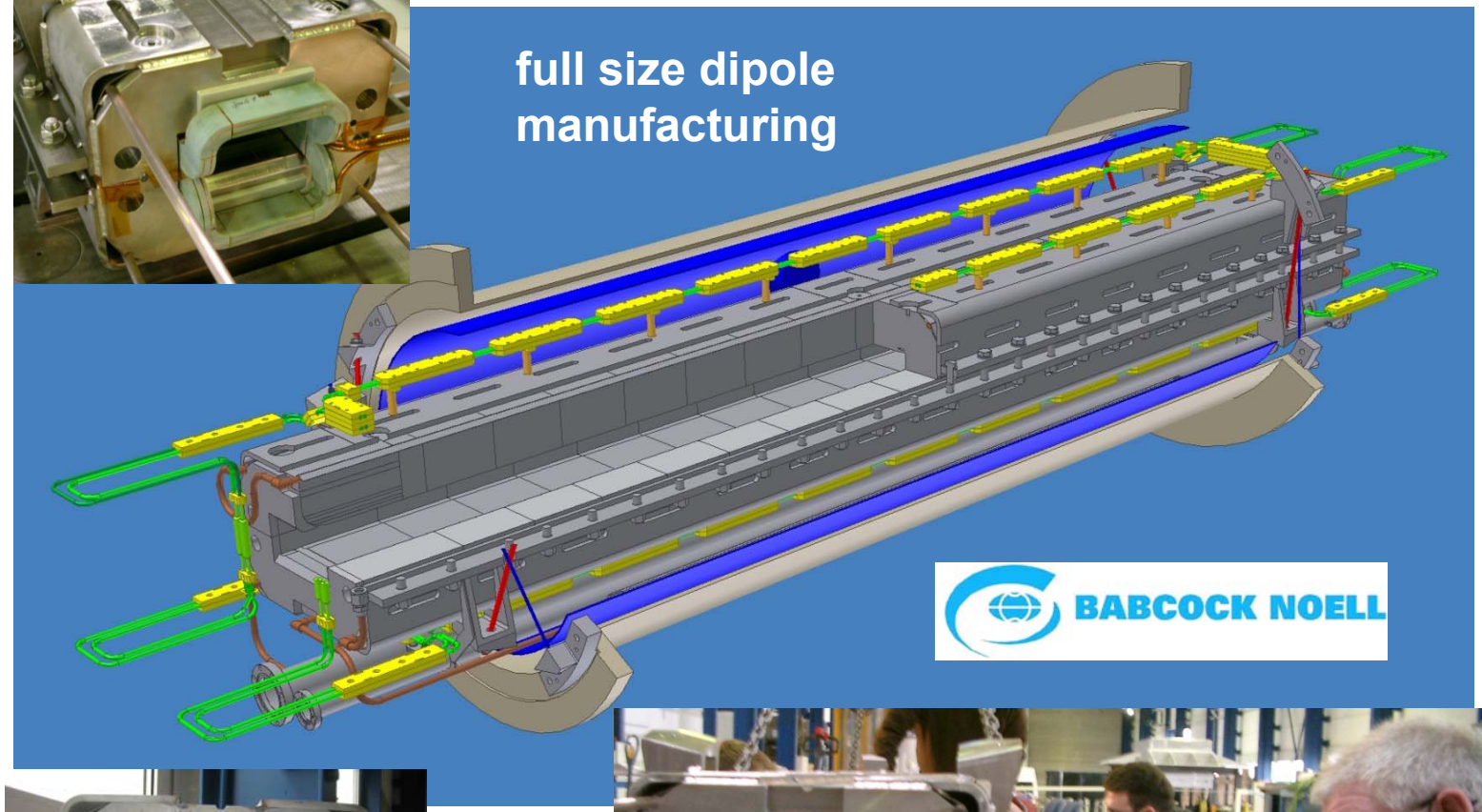

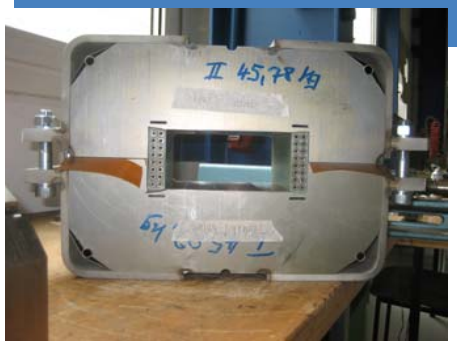

SIS 100 full size model: dipole from Babcock Noell GmbH

► see also: G. Sikler et al. "Manufacturing of the first Full Size Model of a SIS100 Dipole Magnet", WAMSDO 2008, 19-23 May, CERN, Geneva

SIS 100 full size model: dipole from Babcock Noell GmbH

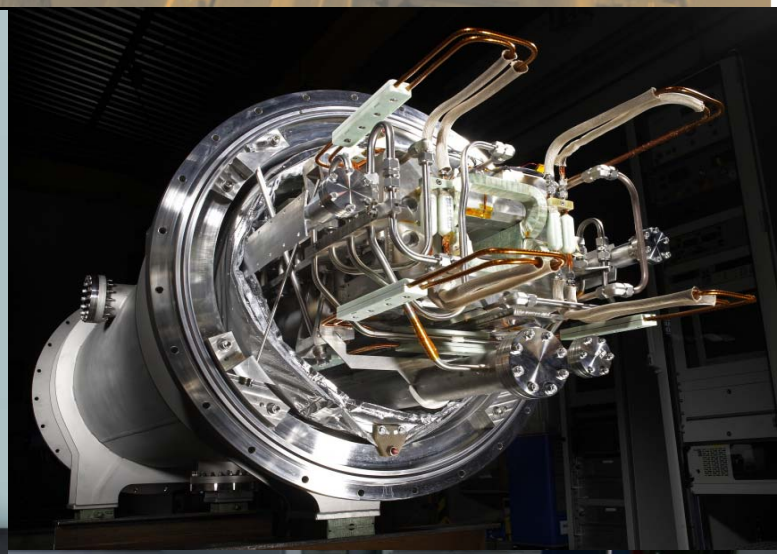

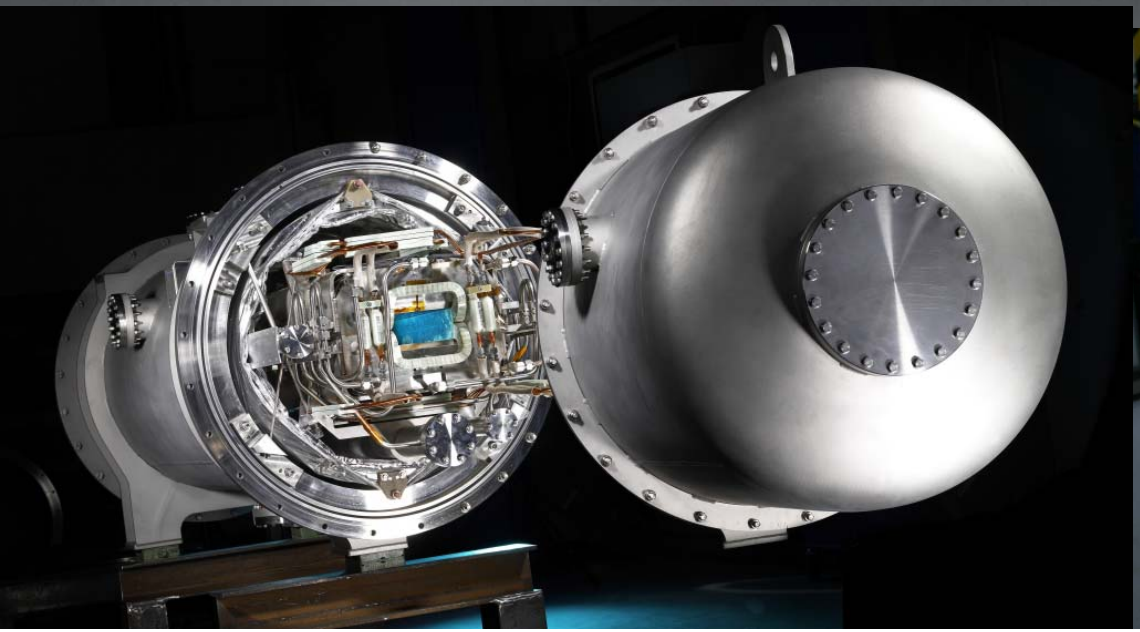

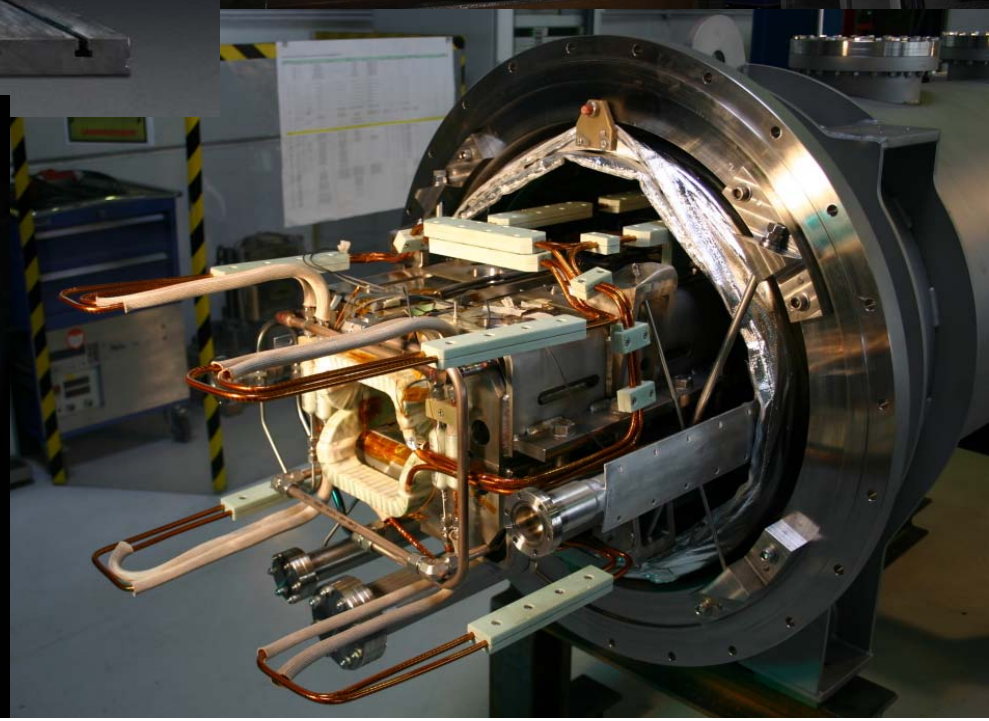

SIS 100 full size model: dipole manufacuring at JINR

ROTATING TABLE

1. WINDING RACETRACK COIL

TWO-STAGED MANUFACTURING OF THE COIL ENDS:

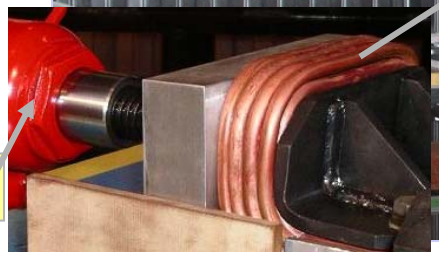

2. BEND THE ENDS AS WHOLE

SIS 100 full size model: dipole manufacuring at JINR

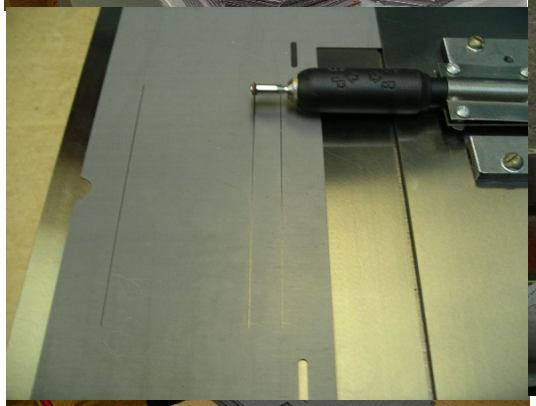

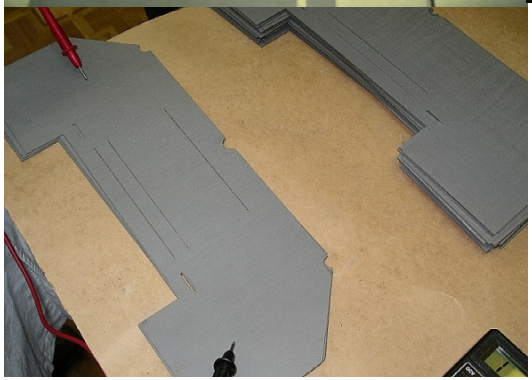

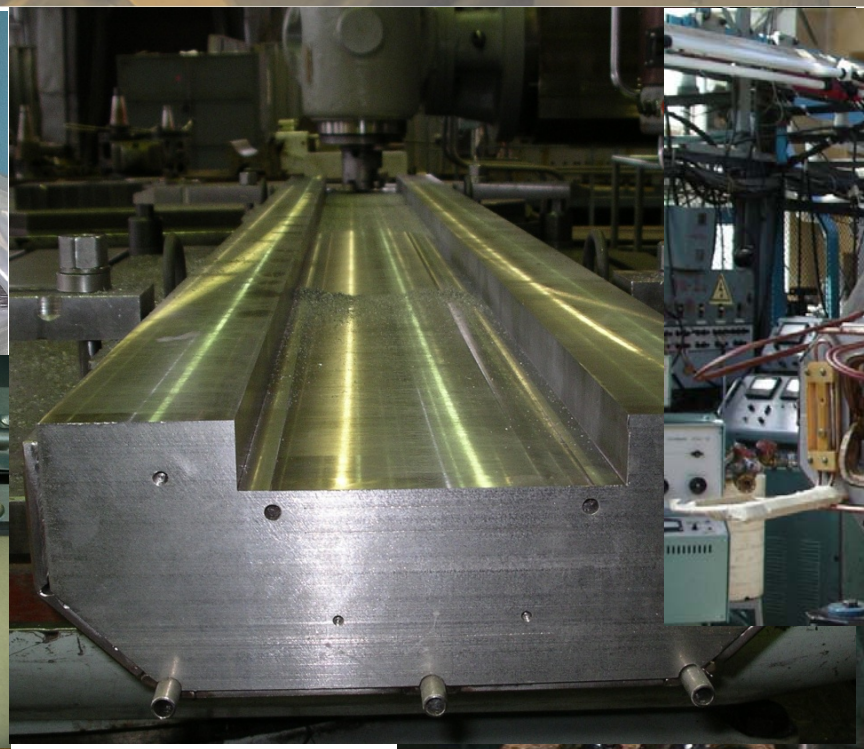

high quality and reproducible production of the lamination shape and the the iron yoke

► see also: A.Kovalenko et. al "Full Size Magnets for Heavy Ion Superconducting Synchrotron SIS100 at GSI: Status of Manufacturing and Test at JINR", EPAC 2008, 23 to 27 June, Genova June, 2008, Genova

Full size model: curved dipole geometric parameters

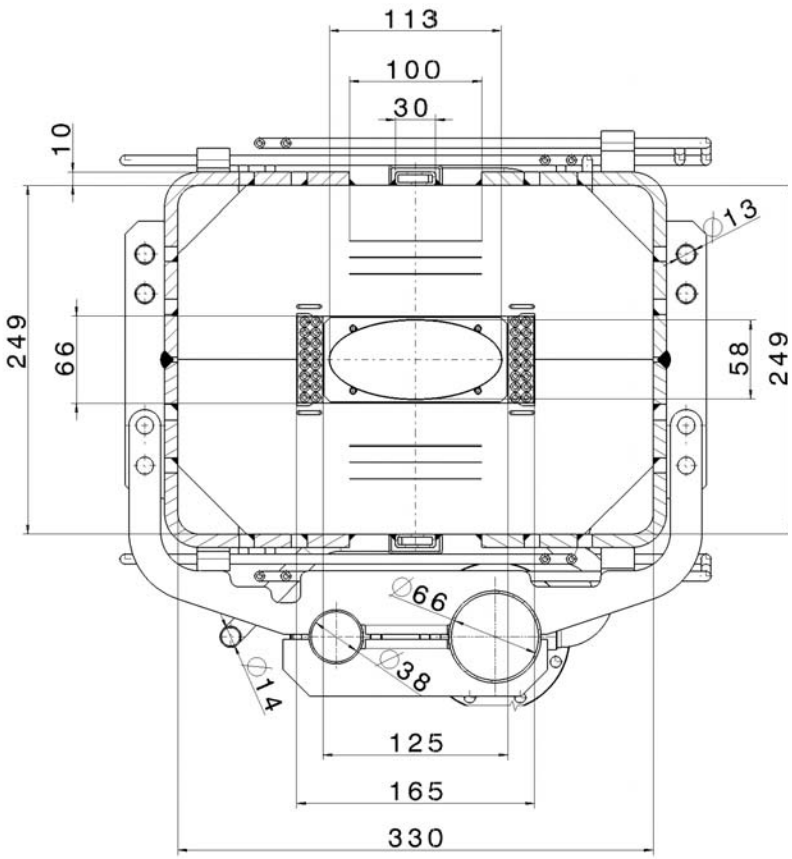

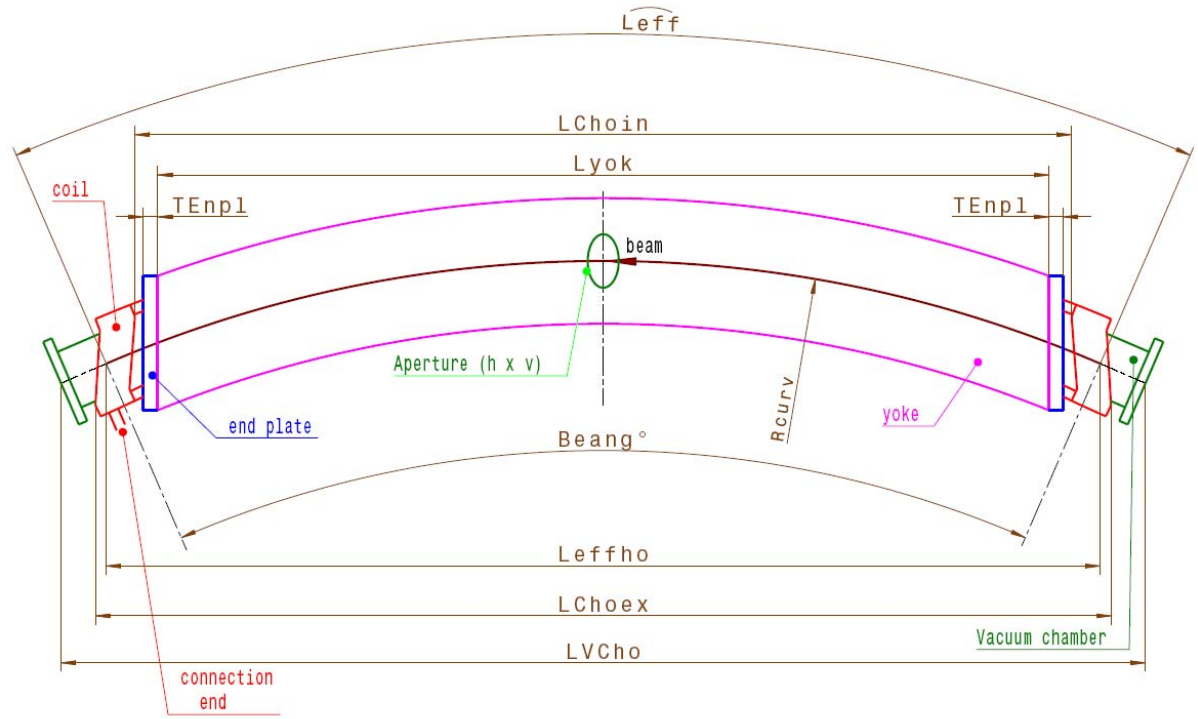

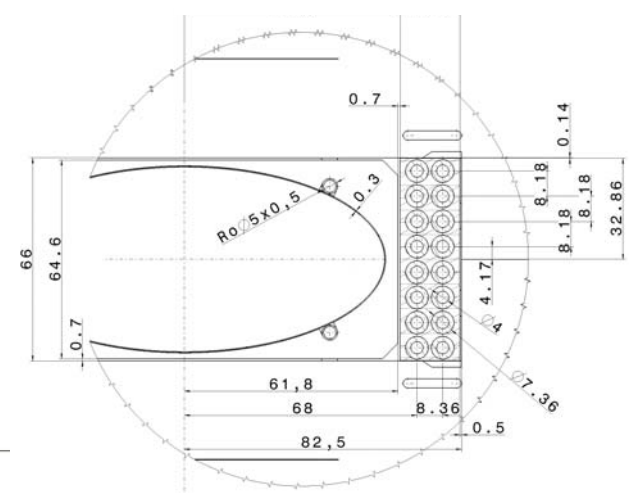

► Geometrical details and dimensions

Full size model: curved dipole assembly at BINP

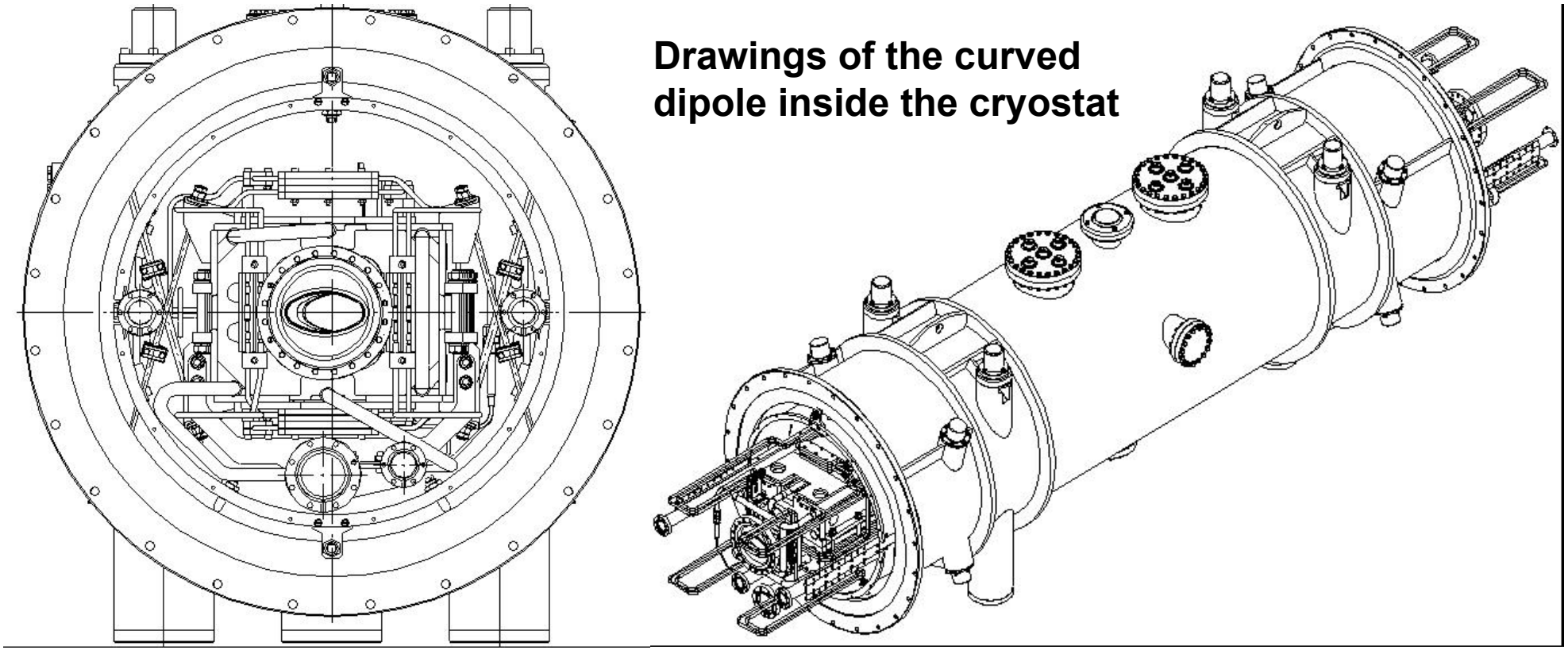

- ► Yoke and cryostat from BINP Novosibirsk
- ► SC coil will be produced at JINR Dubna
- ► Completion scheduled for November 2008

Full size model: quadrupole manufacturing at JINR

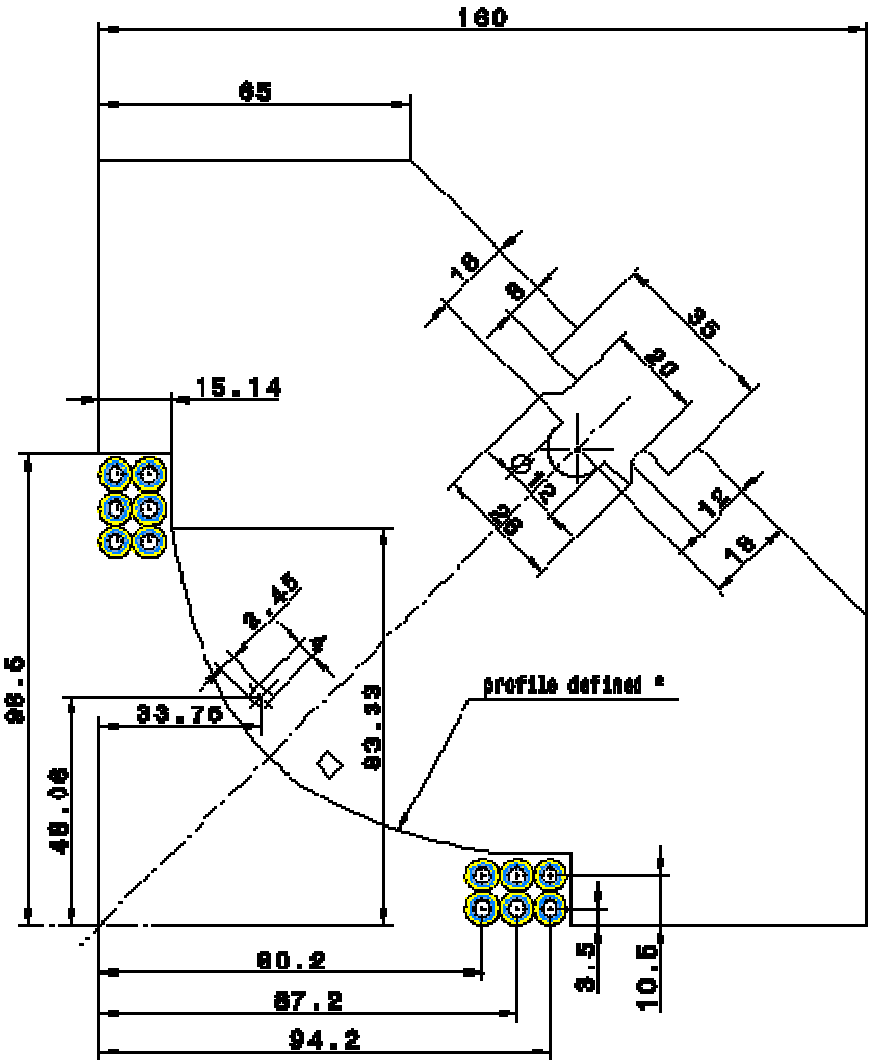

lamination geometry

geometric details of the full length quadrupole design

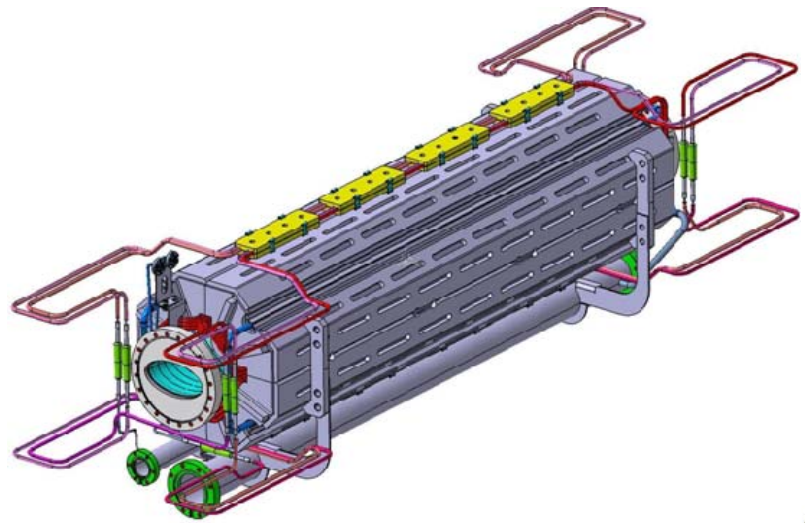

3D drawings: complete QP and coil structure

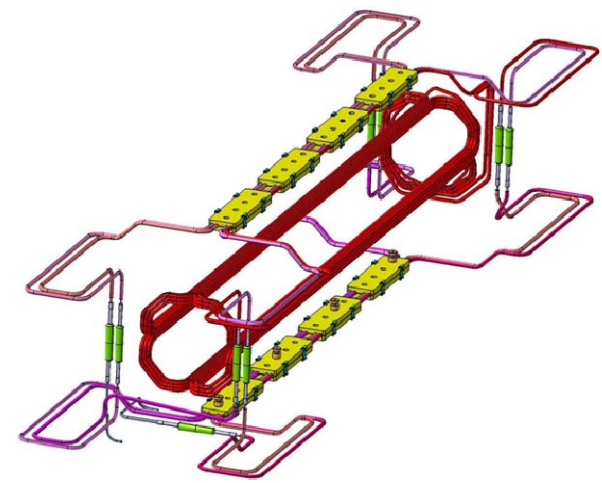

Ready for tests of full length main magnets produced at JINR Dubna:

Dipole: September 2008 (started KW 36 !)

Quadrupole: December 2008

Additional operation requirements

- Continuously triangular cycle:
  - During commissioning of experiments, many other operation modes may occur. An extremal cycle with $B_{max} = 2$ T, $^{dB}/_{dt} = 4$ T/s, **f = 1 Hz must be provided** (decision March 2007)

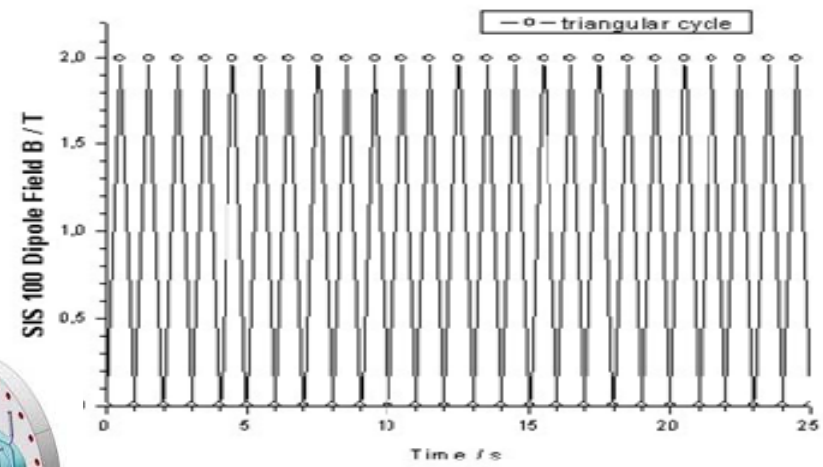

- Beam pipe as cryopump
  - elliptical cross section
  - wall thickness: 0.3 mm (minimize AC-losses!)
  - strengthening of chamber by ribs
  - $T_{max} < 15$ K (to be cooled by forced Helium flow or yoke)
  - Optimal integrative design solution is urgent !

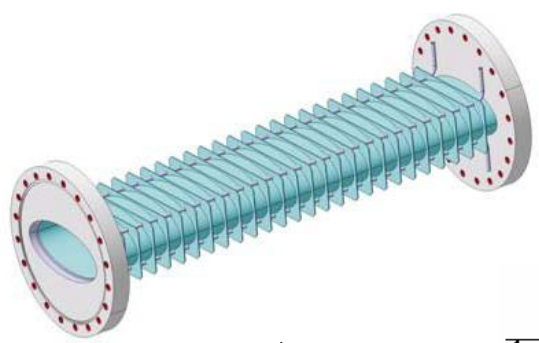

Significant additional heat loads and field effects !

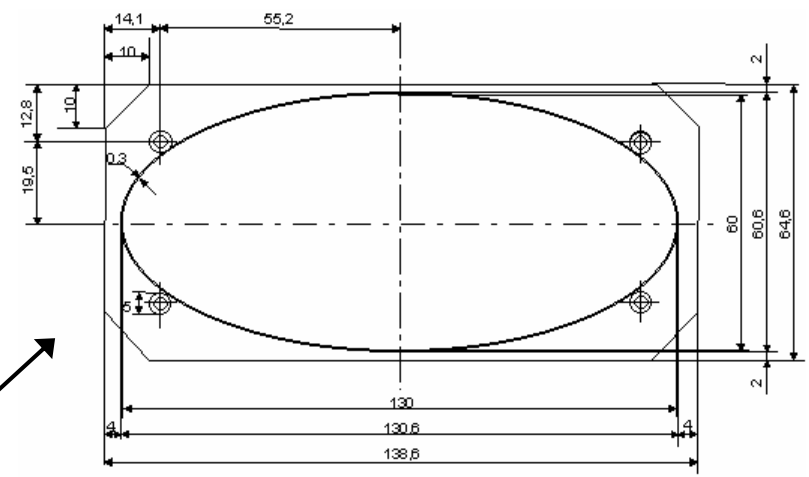

dipole vacuum chamber

► see also: P. Schnizer et al.: „Superferric Rapidly Cycling Magnets – Optimized Field Design and Measurement“, WAMSDO 2008, CERN, Geneva

Conclusions toward the final dipole design

- The estimated limits of the actual full size models are not sufficient for the recently changed requirements of the SIS100 machine (also a significant operation margin has to be provided).
- Redesign options to satisfy the updated operation parameters:
  - new cable design (with lower hydraulic resistance)
  - shorter coil length
  - CSLD (curved single layer dipole)

Magnet Design Options: New cable and single layer coil

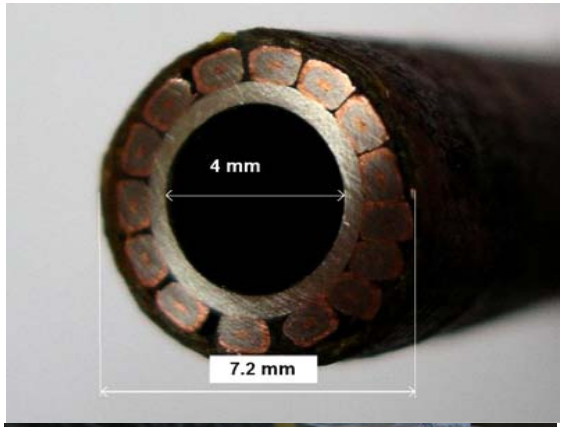

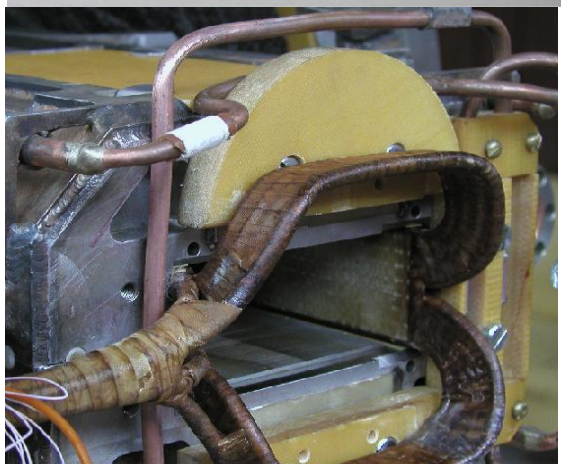

"DESIGN AND TEST OF A HOLLOW SUPERCONDUCTING CABLE BASED ON KEYSTONED NbTi COMPOSITE WIRES", ASC 2004, October 2004, Jacksonville, USA H. G. Khozhibagiyan et al., ASC2004, Jacksonville, Florida, USA, IEEE Trans. on Supercond., Vol. 15, No. 3, Part II, pp. 1529-1532, June 2005

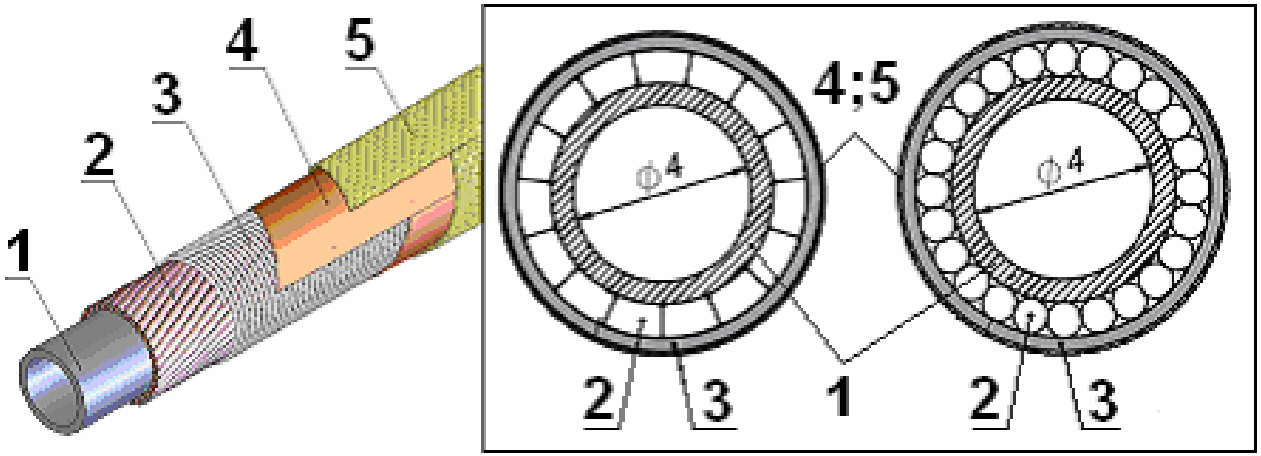

- **cycle limit estimations for a round wire cable CSLD with 8 turns (detailed specification in MT-INT-EF-2007-002, GSI):**

Dynamical heat release (cycle 2c)	W	≈ 31
Pressure drop for cycle 2c	bar	≈ 0.42
Maximal temperature of helium in the coil (2c)	K	4.7
Dynamical heat release (B_{max} = 1.9 T, f = 1 Hz)	W	≈ 54
Pressure drop (B_{max} = 1.9 T, f = 1 Hz)	bar	≈ 0.7
Maximal temperature of helium in the coil (triangular cycle with B_m = 1.9 T, f = 1 Hz)	K	4.8

Design and test of a single layer coil model

- advantages of a high current cable:
  - single layer coil
  - allows reducing the <u>aperture</u> and AC loss
  - <u>simplifies cooling</u>
  - simpler coil mechanics

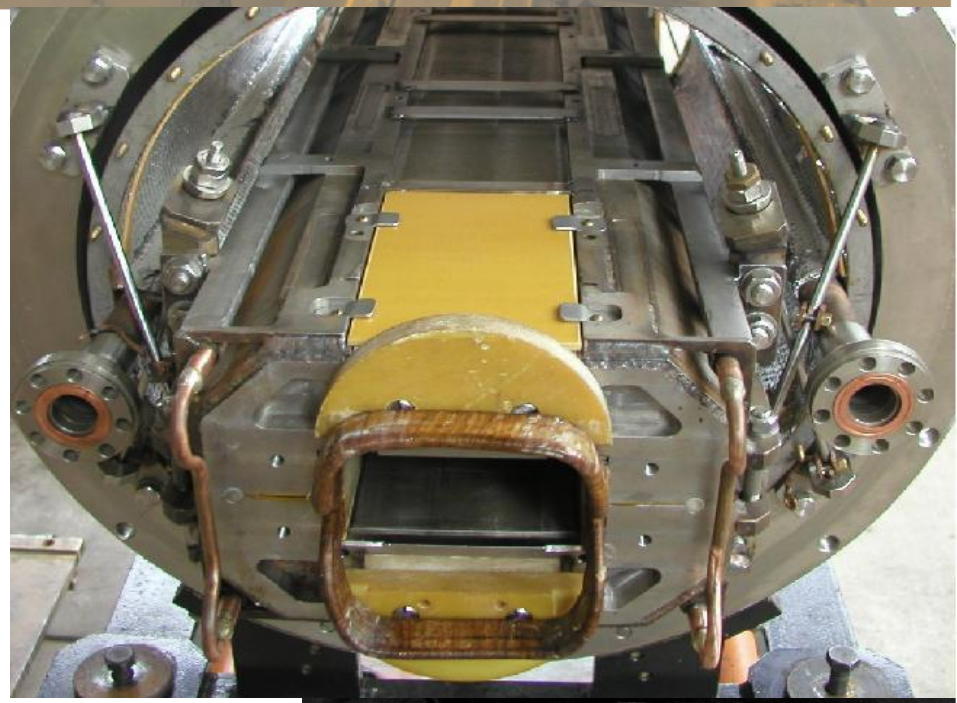

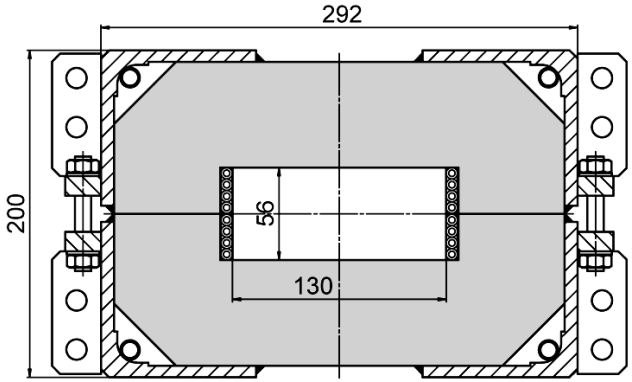

▶ model dipole with a single layer coil, tested at JINR Dubna in 2004 and a quadrupole based on a two turn per pole ▶ coil, tested in 2006

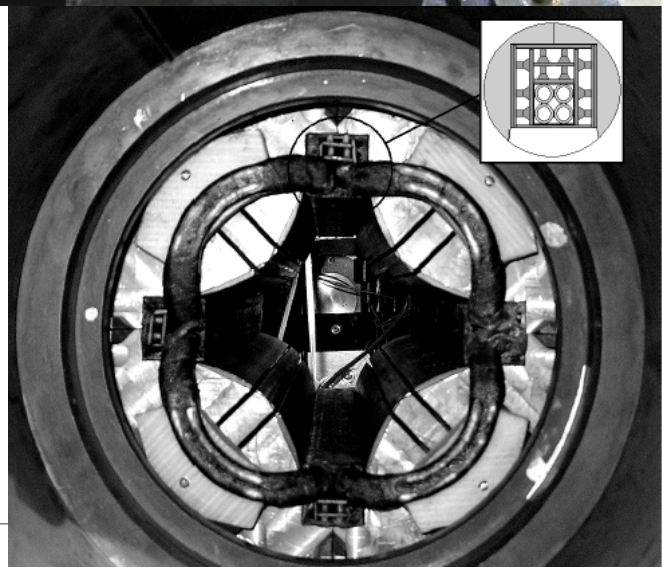

Main Operation Parameters of the CSL-Dipole

Parameter \ Version	straight	curved	C2LD-a	CSLD
Maximum field, T	2.11	1.9	1.9	1.9
Magnetic length, Tm	2.756	3.062	3.062	3.062
Turns per coil	**16**	**16**	**16**	**8**
Usable aperture, mm^2	130 · 60	115 · 60	115 · 60	140 · 60
Cables				
Number of strands	**31**	**31**	**38**	**23**
Outer diameter, mm	7.36	7.36	7.5	8.25
Cooling tube inner diameter, mm	**4**	**4**	**4.7**	**4.7**
Length of the cable in the coil, m	110	110	110	57
Bus bars length, m	37	39	39	39
Operating current	**7163**	**6500**	**6500**	**13000**
Critical current @ 2.1 T, 4.7 K	11900	11900	11900	19840
Wires				
Strand diameter, mm	**0.5**	**0.5**	**0,46**	**0.8**
Filament diameter, µm	2.5 - 4	2.5 - 4	2.5 - 4	3.5 - 4
Filament twist pitch, mm	4 – 5	4 – 5	4 - 5	5 - 8
loss and hydraulic				
Static heat flow, W	7	7	7	7
Heat load to bus bars, W	0.5	0.5	0.5	0.5
cycle 2c				
AC losses, W	36.3	35.4	35.4	35.7
Pressure drop, bar	1.10	1.15	0.604	0.389
T_{max} of *He* in the coil (for $x_6 \approx 1$) , K	4.94	4.95	4.78	4.64
triangular cycle [dB/dt = 4 T/s, $t_{cycle} = 2 \cdot B_{max} / (dB/dt)$]				
AC losses, W	75.1	74.0	74.0	74.6
Pressure drop, bar	**1.14**	**1.20**	**0.657**	**0.486**
T_{max} of *He* in the coil, K	5.08 at T_6=8K	5.10 at T_6=8K	4.86 at T_6=8K	4.72 at T_6=7K

for details see →

Curved Single Layer Dipole at intensive ramping modes:

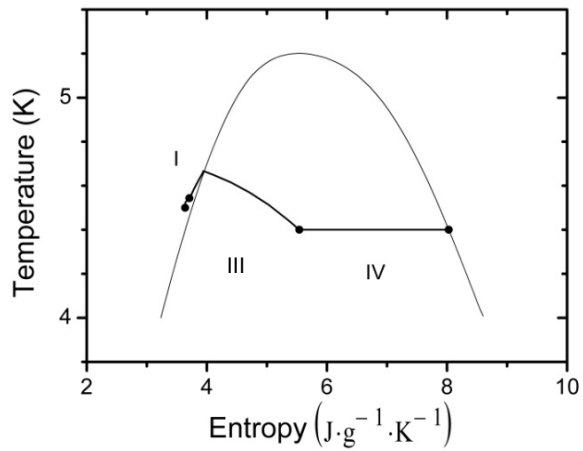

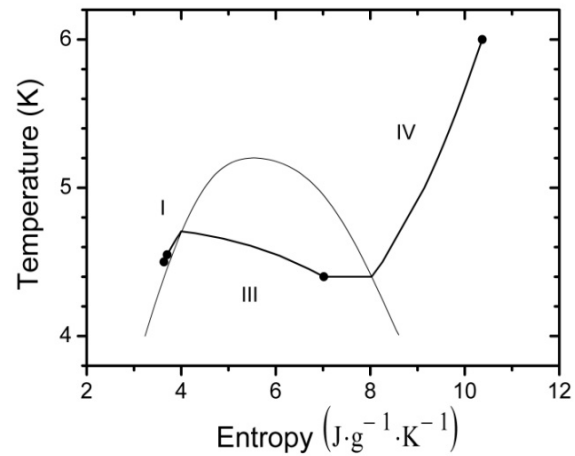

T – S diagrams for the CSLD operation

Helium flow trough the bus bars I, the coil III and the iron yoke IV at cycles - 2c (left) and triangular (right)

Single Layer Dipole:
"Minimization of AC Power Losses in Fast Cycling Window Frame 2T Superferric Magnets with the Yoke at T=4.5K",E.Fischer et al., ASC 2004, 3LR04; Internal Note GSI: MT-INT-EF-2004-09

Curved Single Layer Dipole:
"Full Size Model Magnets for the FAIR SIS100 Synchrotron"; Egbert Fischer, Hamlet Khodzhibagiyan, Alexander Kovalenko; MT-20; 4V07; 2007; Internal Note GSI: MT-INT-EF-2007-03

Dipole redesign: cable parameters (TDR)

Number of strands				23	
Transposition pitch				50	mm
Cooling tube material				Cu-Ni	
Cooling tube outer diameter				5.7	mm
Cooling tube wall thickness				0.5	mm
Critical current @ 2.1 T, 4.2 K				19840	A
1st insulating layer		with epoxy impregnation			
	material	kapton	tape	2	layers
	thickness/layer			50	microns
2nd insulating layer		with epoxy impregnation			
	material			2	layers
	thickness	kapton	tape	70	microns
Wire					
Strand diameter				0.825	mm
Filament diameter				3.5	microns
Number of filaments				18144	
Filament twist pitch				5-8	mm
Superconducting material				NbTi	
Copper to superconductor ratio				1.5	
Copper RRR				196	
Transverse resistivity					Ωm
Fixation of the strands		CrNi-wire	D=0.2	transp. = 0.4	mm
Coating		epoxy compound			

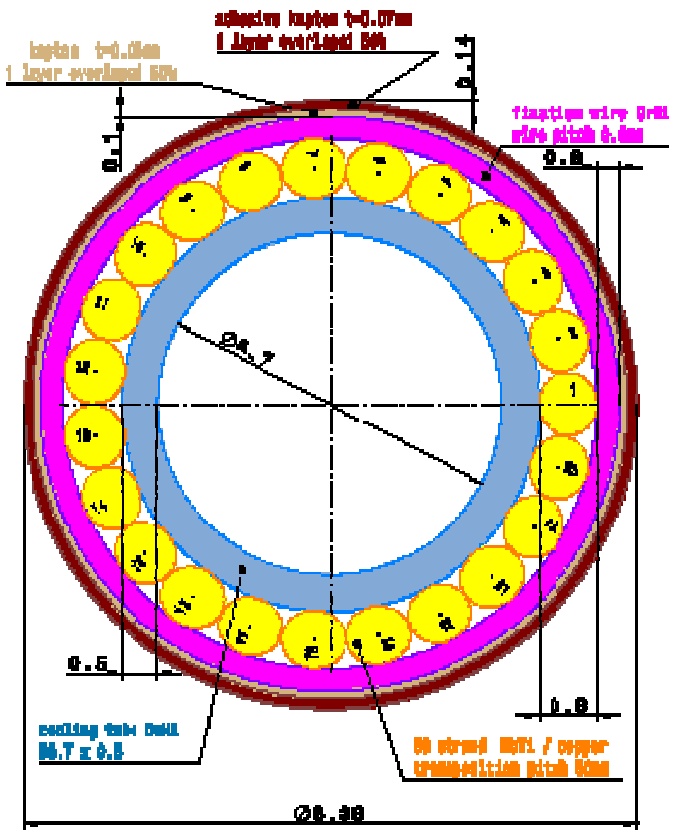

Cross section of the cable adopted for the SIS100 dipole coils (Nuclotron-type cable).

Dipole redesign: geometric details (TDR)

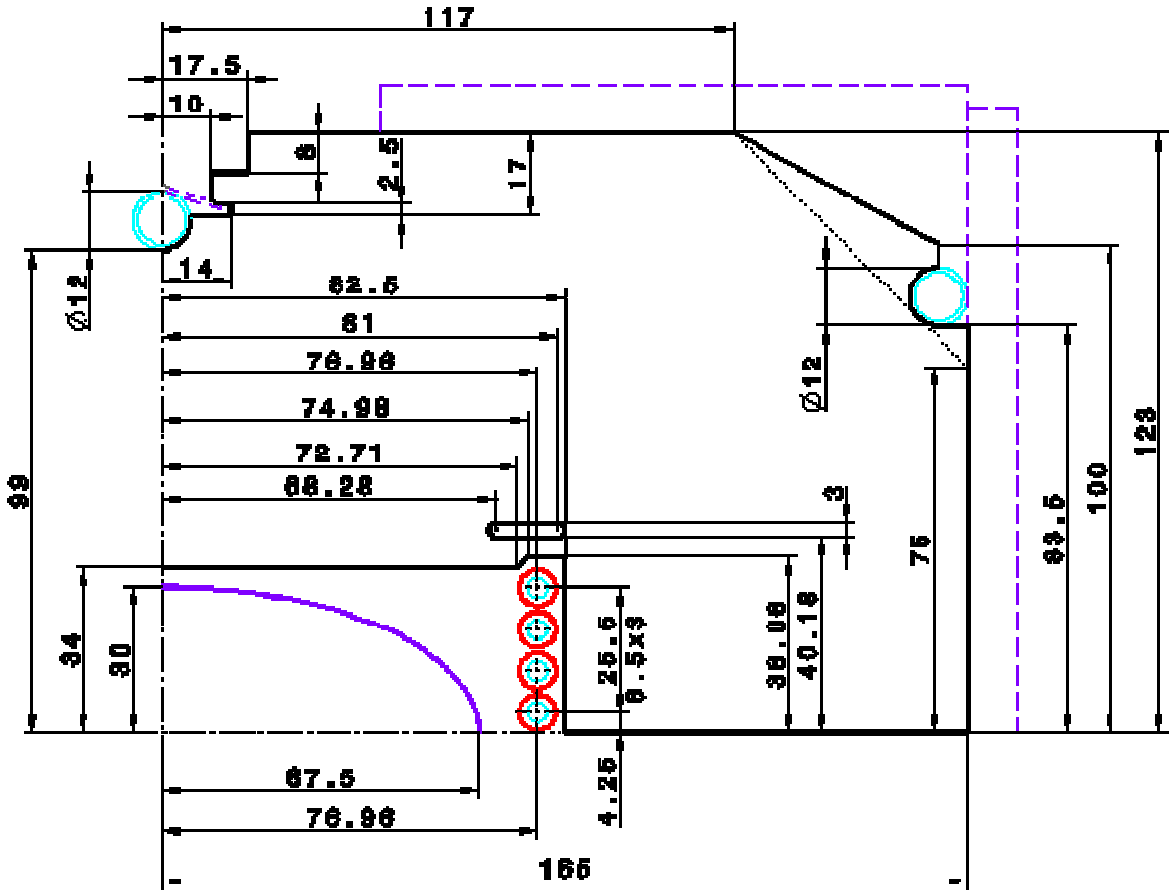

lamination geometry

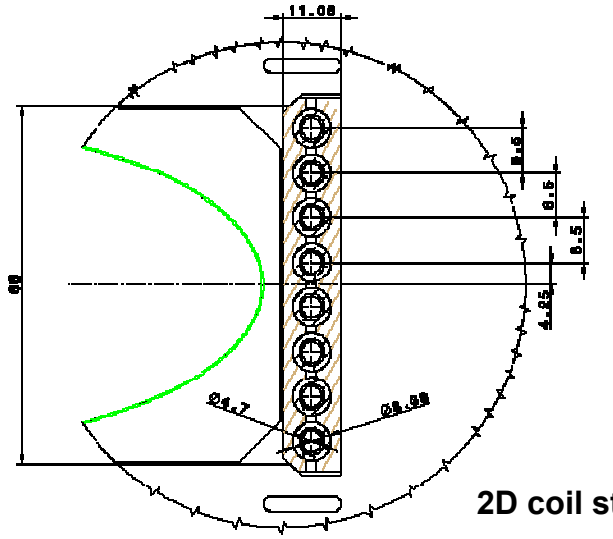

2D coil structure

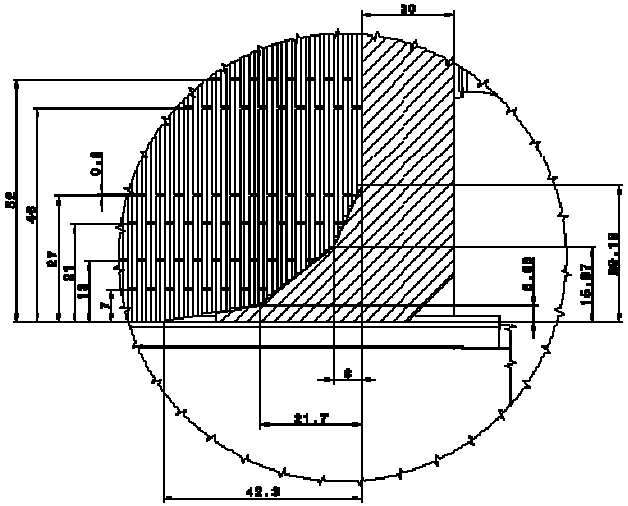

lamination slits near yoke end

Dipole redesign: magnet parameters (TDR)

Name of the magnet		SIS 100 Main Ring Dipole
Number of magnets		108 + 1 reference magnet
Design		Window-frame, laminated cold iron yoke, lamination thickness 1mm, **one layer coil with 8 turns**
Max. Field	T	1.9
Min. Field	T	0.23
Bending angle	Deg.	3.33
Edge angles (entrance / exit)	Deg.	1.665 / -1.665
Orbit curvature radius, R	m	52.632
Effective magnetic length, L	m	3.062
Coil aperture	mm	165 · 68
Useable aperture (good field region):	mm	135 · 60
Field quality (goal)		$\pm 6 \cdot 10^{-4}$
Overall magnet length (slot length)	m	3.354
Overall width (cryostat)	m	1.0
Overall height (cryostat)	m	1.0
Overall weight	kg	1850
Current at max. field	A	12745
Inductance	mH	0.55
Ramp rate	T/s	4
High field flat top duration	s	0.1
Low field flat top duration	s	0.8
Cycle length	s	1.82
Total AC loss per cycle @4.2K per magnet (cycle number 2c)	J	78

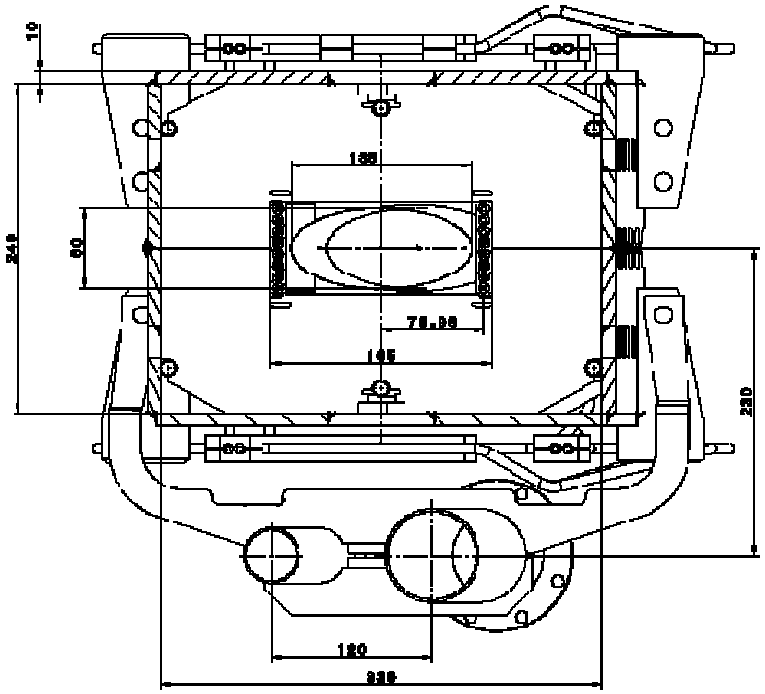

curved single layer dipole (CSLD)

(details: see Technical Design Report, GSI Darmstadt, 2008)

2.4. Correction magnets: Chromaticity sextupole [2.8.2.3.2]

Requirements

Number of magnets	48
Physical length	0.55 m
Magnetic length	0.5 m
Aperture	135 mm * 65 mm
Maximum main field strength*	175 T/m^2
Minimum Ramp time to max.	0.175 second

* $$B = B_y + iB_x = \sum_{n=1}^{\infty}(B_n + iA_n)(x+iy)^{n-1}$$

Computation results

Maximum Operation current [A]	182
Stored energy [J]	1050
Inductance [mH]	63.4
Inductive voltage [V]	66
Peak Power [W]	12000

Design:

- Super-ferric magnet
- Nuclotron type cable with insulated sc wires:
  - Low current (reduce lead loss)
  - Each wire is connected in series

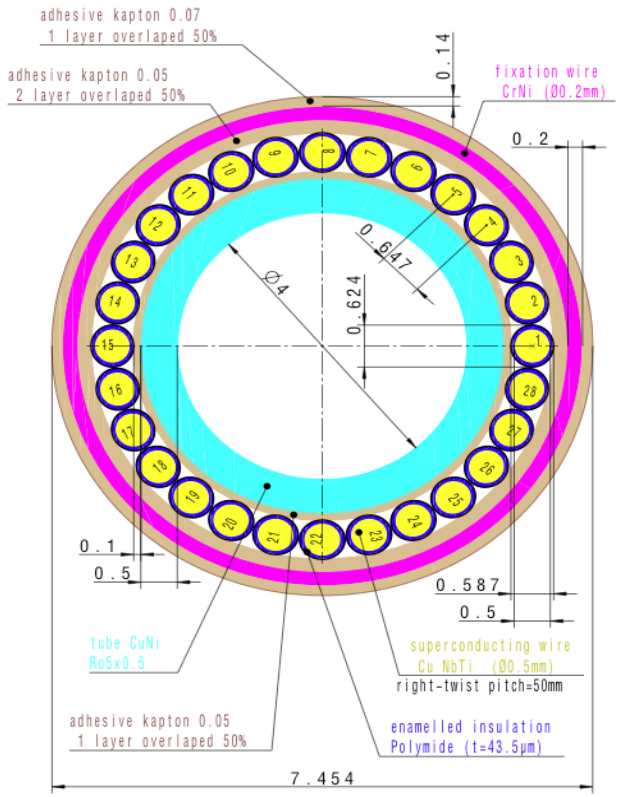

Conductor for corrector magnet
Ø7,454 28 wires

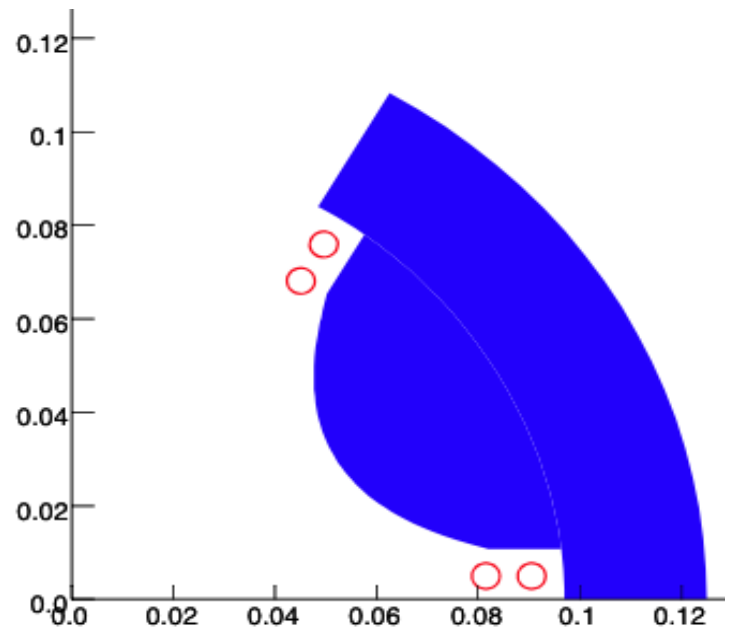

1/6 cross section

courtesy of Kei Sugita

2.4. Correction magnets: Error compensation multipole correctors [2.8.2.3.1], [2.8.2.3.3], [2.8.2.3.5]

Requirements	Quadrupole	Sextupole	Octupole
Number of magnets	12		
Physical length	0.8 m		
Magnetic length	0.75 m		
Aperture diameter	150 mm		
Maximum field strength*	B_2 = 0.75 T/m	B_3 = 25 T/m^2	B_4 = 333 T/m^3
Ramp time to max.	0.15 second	0.238 second	0.235 second

$$* \; B = B_y + iB_x = \sum_{n=1}^{\infty} (B_n + iA_n)(x+iy)^{n-1}$$

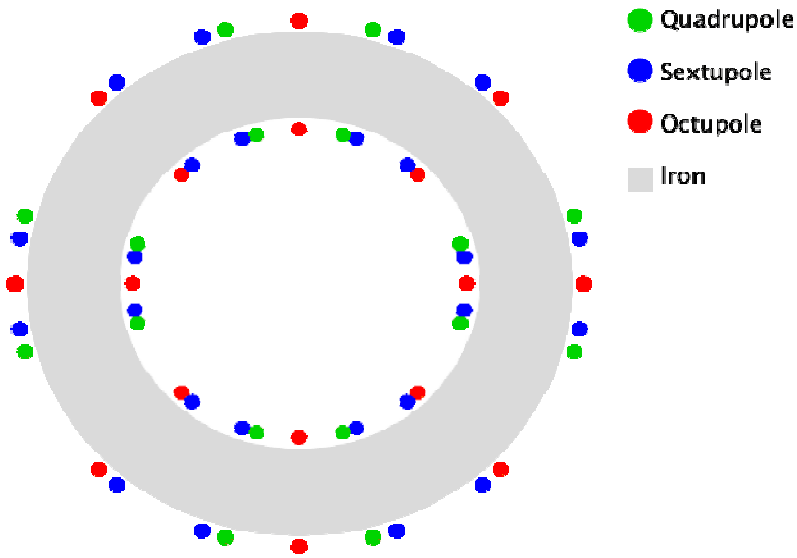

Computation results

	Quadrupole	Sextupole	Octupole
Current [A]	86	191	300
Stored energy [J]	33	219	180
Inductance [mH]	9	12	4
Inductive voltage [V]	5	10	5
Peak power [W]	441	1827	1570

Design: Nested magnet

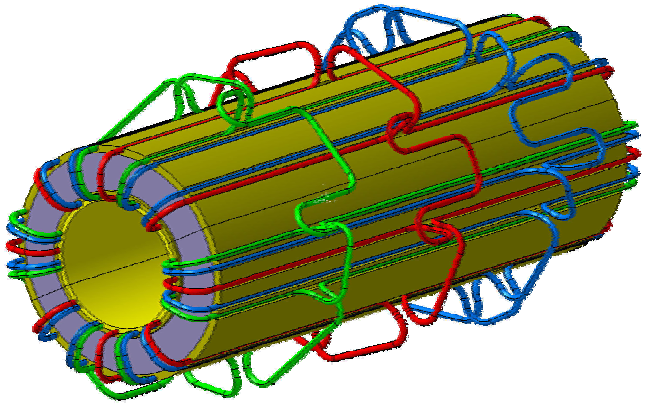

courtesy of Kei Sugita

2.4. Correction magnets: Error compensation multipole correctors

[2.8.2.3.1], [2.8.2.3.3], [2.8.2.3.5]

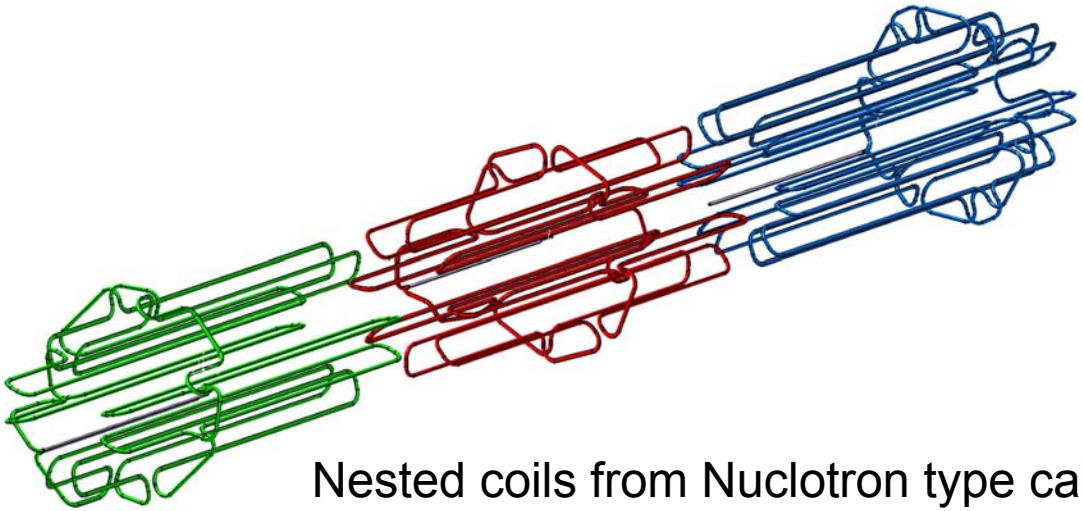

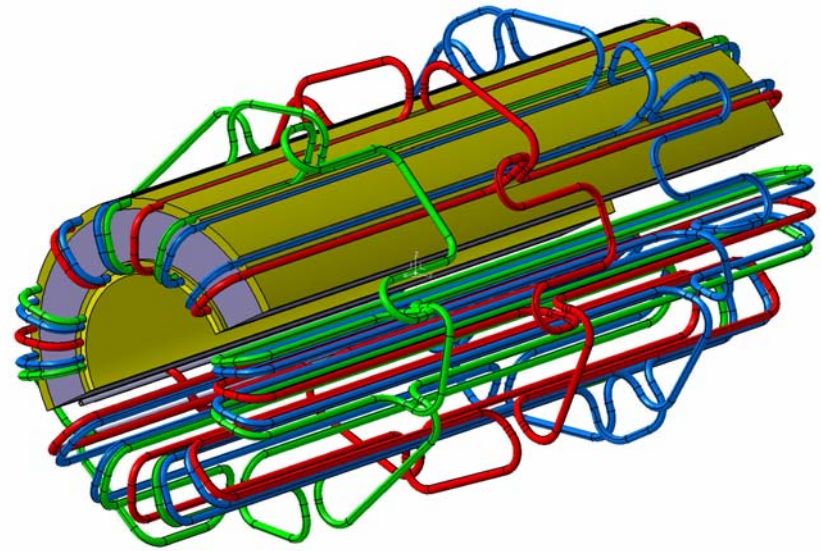

Nested coils from Nuclotron type cable with insulated sc wires

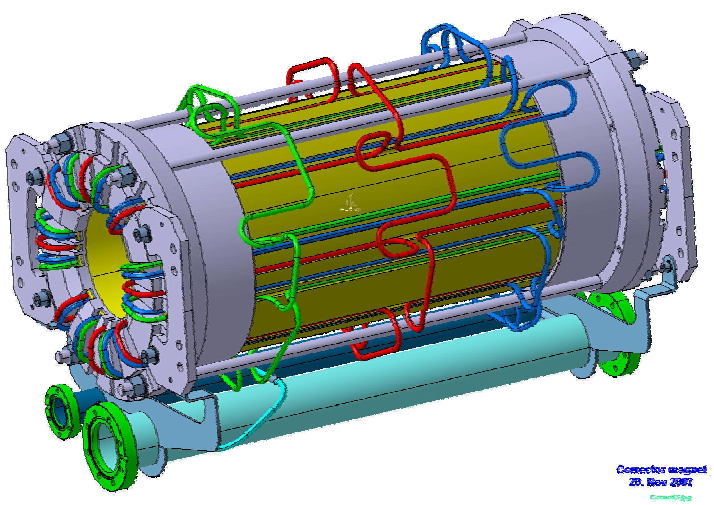

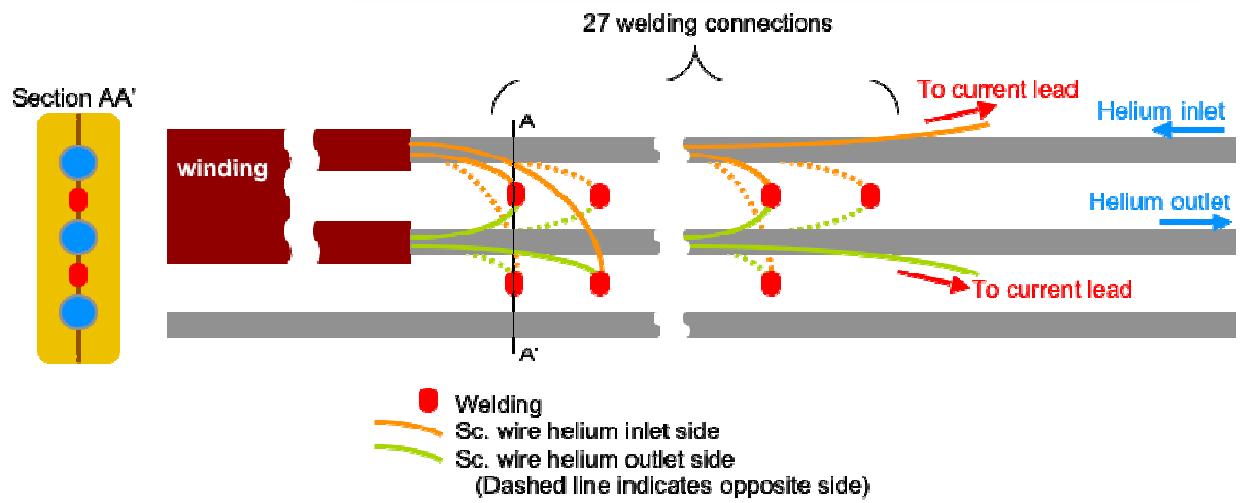

courtesy of Johann Macavei

2.5. Steering magnet [2.8.2.4.1]

- Horizontal and vertical dipole nested
- Nuclotron type cable with insulated sc wires

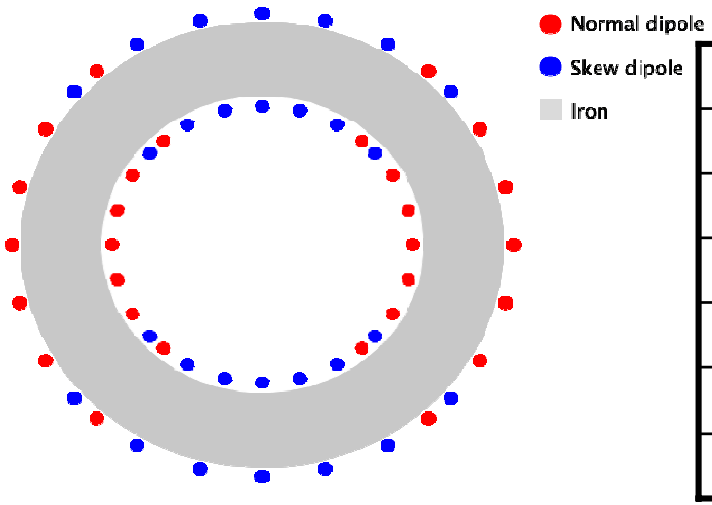

Requirements

	H/V dipole
Number of magnets	84
Physical length	0.55 m
Magnetic length	0.5 m
Aperture diameter	150 mm
Main field strength*	0.3 T
Ramp time to max.	0.2 second

Computation results

	H/V dipole
Operation current [A]	250
Stored energy [J]	1250
Inductance [mH]	40
Inductive voltage [V]	50
Peak Power [W]	12500

* $B = B_y + iB_x = \sum_{n=1}^{\infty}(B_n + iA_n)(x+iy)^{n-1}$

Position of correctors

All correctors are next to quadrupole.

Current leads and power converter

All local leads.

Multipole cor. & steering: Their own P.C.

Chromaticity: 8 magnet in series.

Superconductor

Low loss, 4.3μm filament diameter

SIS 100 Straight

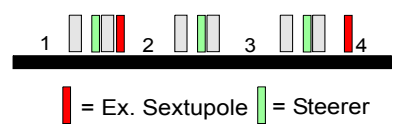

SIS 100 Arc

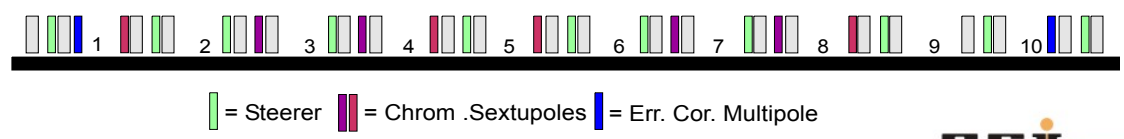

courtesy of Kei Sugita

SIS100 Cable Machine: Overview

Side view (reverse angle):

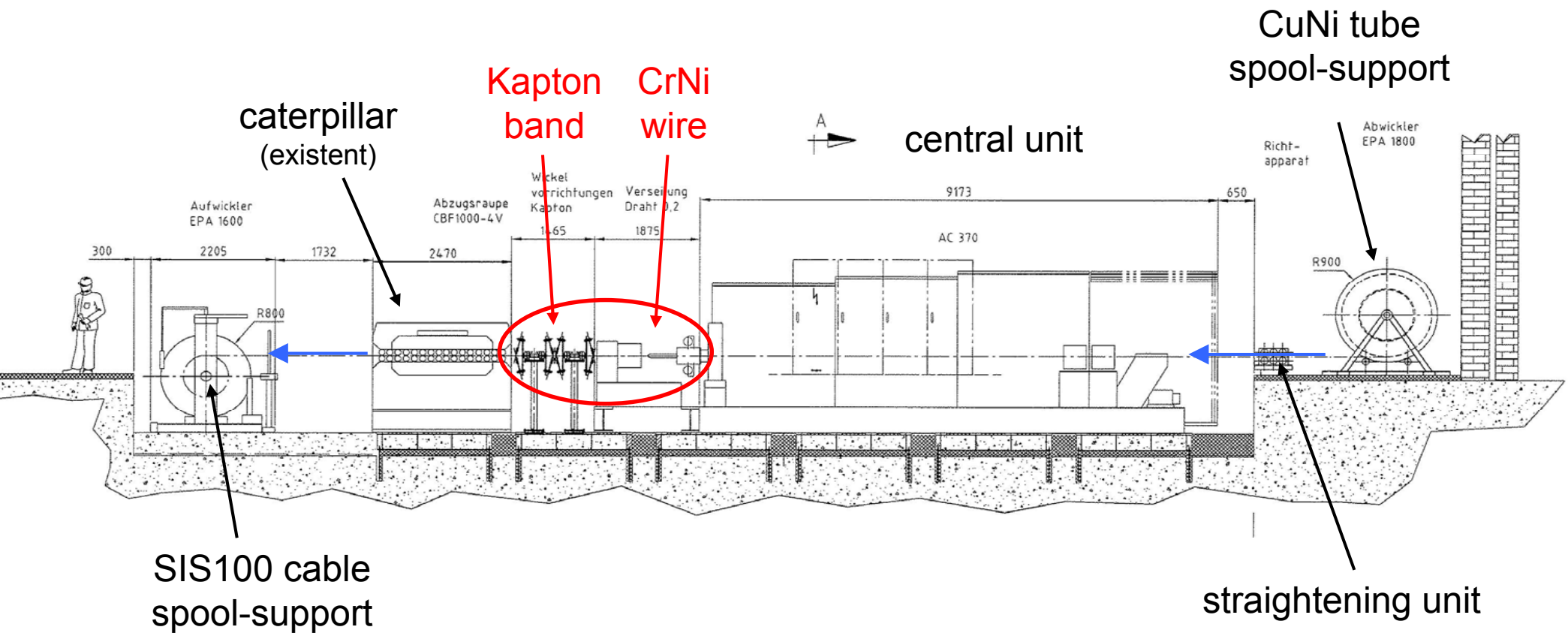

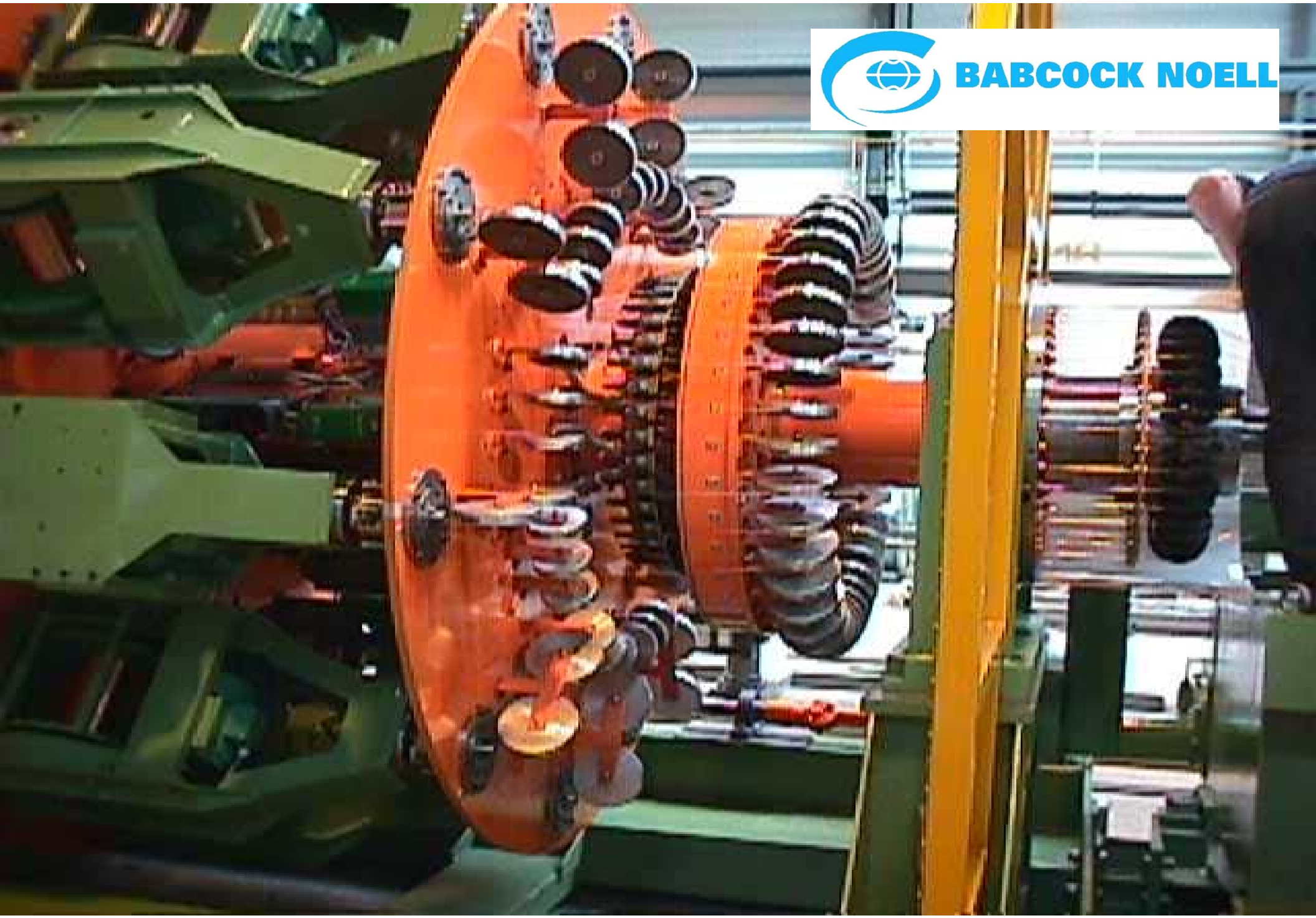
BABCOCK NOELL

Machine for the Production of SIS100 Cable

Features:

Very constant and precise propagation velocity due to independent caterpillar unit.

Caterpillar is the master for all other (spinning) parts and subunits:

=> Constant pitch for SC strands, CrNi wire and various kapton bands

The individual spools for the SC strands actively perform a complete back-rotation (to maintain their orientation with respect to the lab-frame).

Estimated production rate: ≥ 120 m (≈ 1 complete dipole magnet) per 8 h-shift.

=> The overall length of test cable which could be produced during summer 2007 is limited only by the availability of SC strand.

Machine for the Production of SIS100 Cable

FAIR

BABCOCK NOELL

With the new SIS100 cable-machine it is possible:

To produce cables of SIS100- or Rutherford-type (with or without central carrier, without and with compression) composed out of up to 40 strands.

Due to its flexibility and high production rates the new cable machine represents a firm tool for R&D-manufacturing of novel types and geometries of cables.

The process-reliability and the capability of series production is well-proven for the central units of the machine (with the positive implications on the overall project risk).

It is able to meet the tight time schedule for the SIS100 project completion

Estimated production rate: ≥ 120 m (> 1 complete dipole magnet) per 8 h-shift.

3. Cryo Magnetic Module Structure: lattice & elements

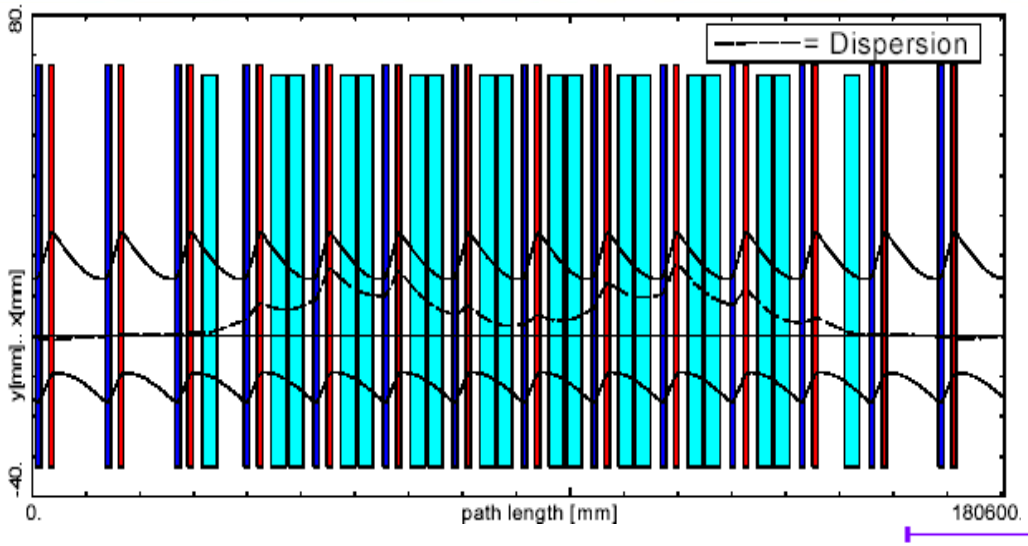

In each regular lattice cell two dipole magnets, each 2.76 m long, and two quadrupole magnets, each 1 m long, are arranged in the doublet focusing scheme D, F, BM, BM to leave sufficient space of more than 5m for installation of steering magnets, sextupole magnets, multipole corrector magnets, and beam position monitors. Doublet focusing in the scheme D, F was chosen to obtain adequate transverse acceptance and to achieve a high collimation efficiency for operation with U^{28+}-ions.

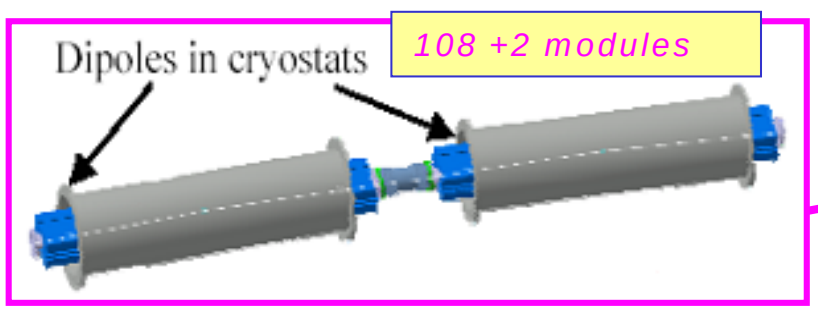

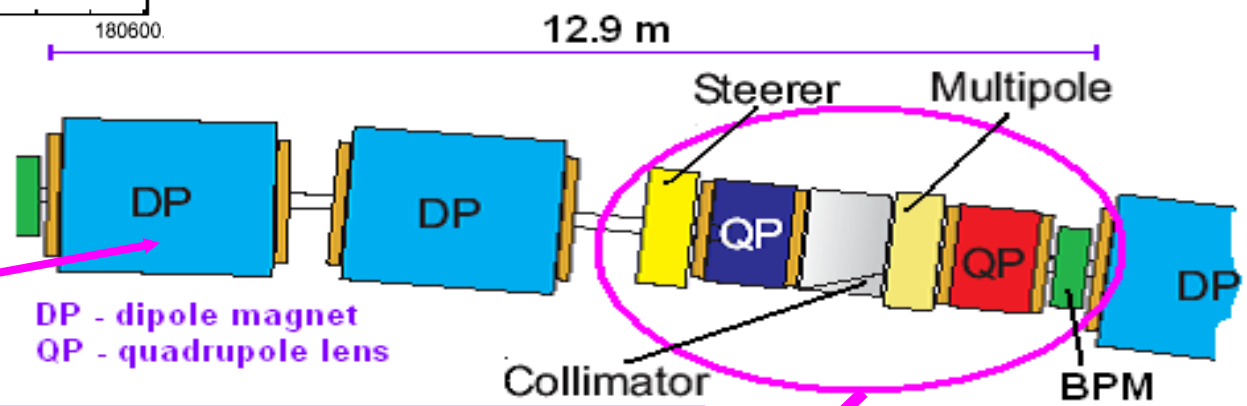

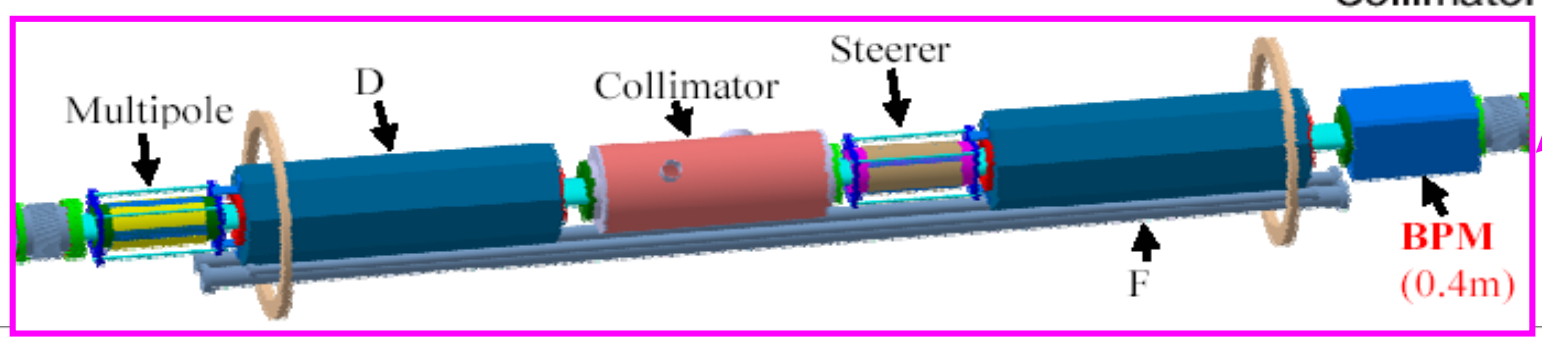

courtesy of Alexander Kovalenko

3. Cryo Magnetic Module Structure

Schematic structure of the Short Straight Section Quadrupole CMM

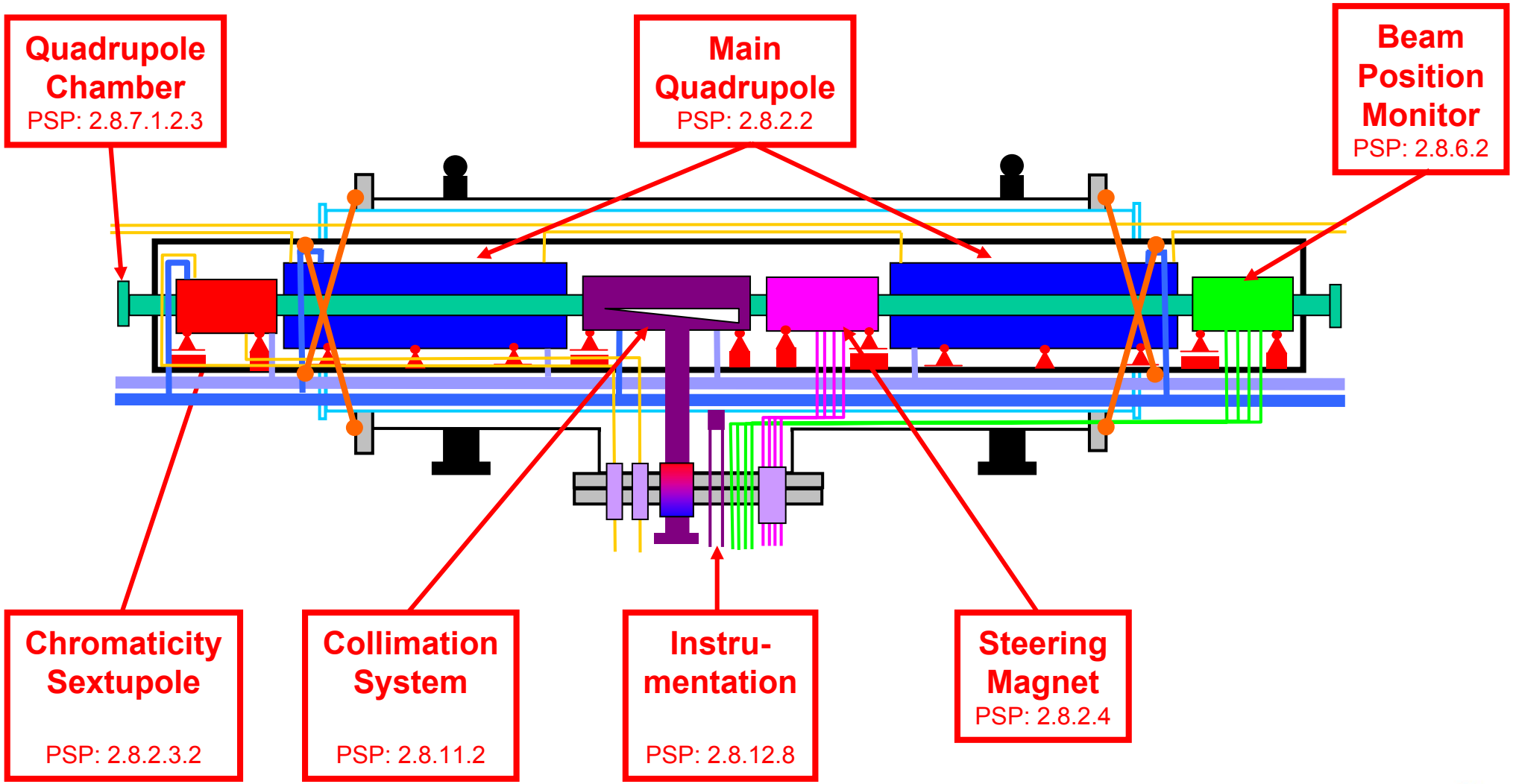

courtesy of Jan Patrick Meier

3. Cryo Magnetic Module Structure

Schematic structure of the Straight Section Qudrupole CMM

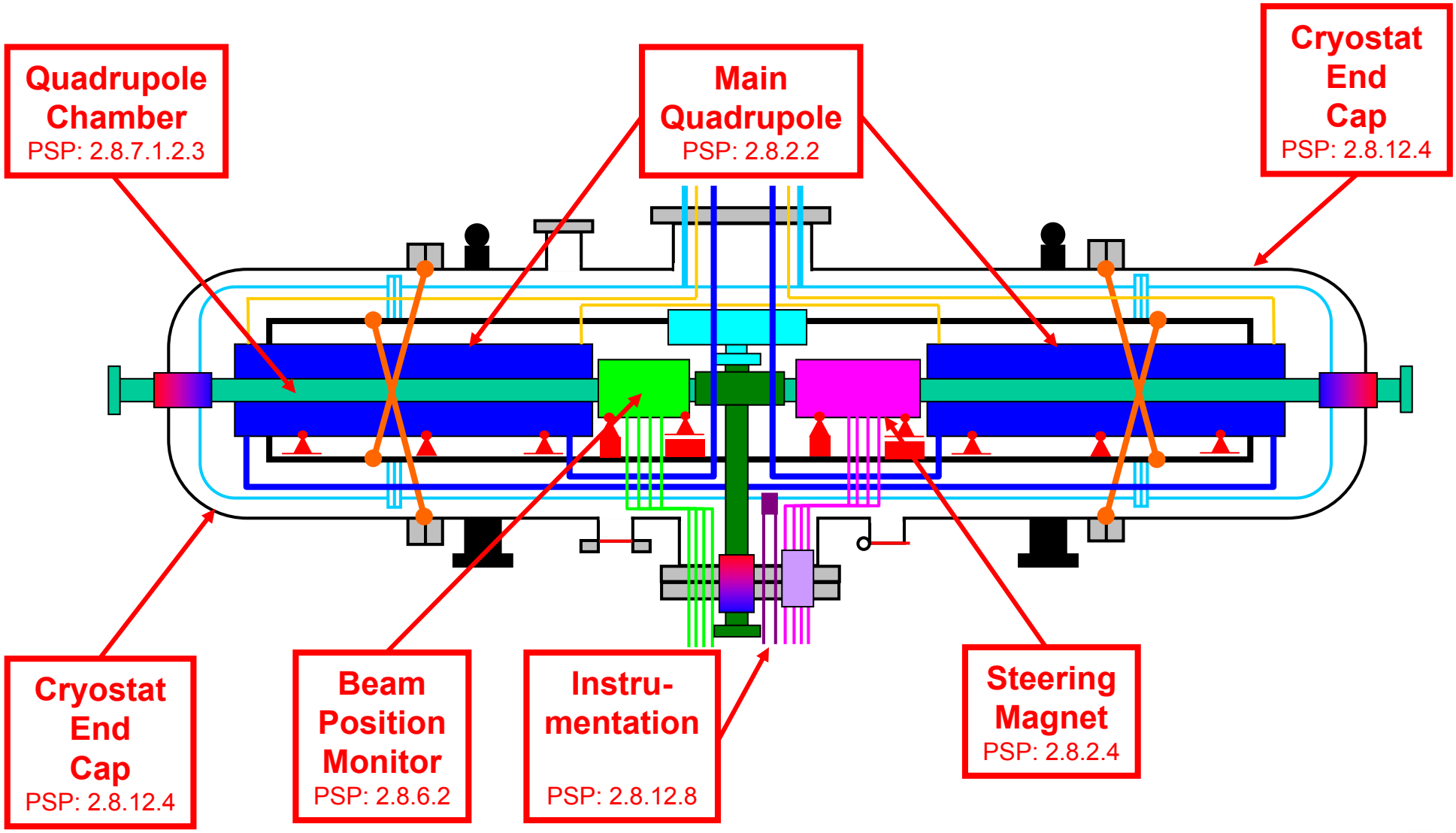

courtesy of Jan Patrick Meier

3. CMM's in the SIS100 Ring Structure

CMM configuration for the SIS 100 synchrotron

CMM Type	S1		S2		S3		S4		S5		S6		Sum
	Straight Section	Arc	Straight Section	Arc	Straight Section	Arc	Straight Section	Arc	Straight Section	Arc	Straight Section	Arc	
Quadrupole (warm – warm)	2		3		3		3		3	2.	3	3.	17
Special Quadrupole	1									2			3
Quadrupole (cold – cold)		9		9		9		9		9		8	53
Quadrupole (cold – warm)	1.	2		2		2		2				3	11
Main Dipole		18		18		18		18		18		18	108

1. The transfer CMM to SIS300 is forming a special module in the straight section of sector 1
2. Injection and Extraction CMM are termination the arc cryostat in sector 5
3. One of the SSS QP CMM's has changed to an arc termination version due to the warm missing dipole gap
4. Amongst the SSS QP CMM's are also further configuration varieties which are not note noted in this table.

courtesy of Jan Patrick Meier

Summary

- The main R&D goals of SIS100 magnets has been reached.
- Manufacturing techniques are prepared for the full length dipole and quadrupole magnets. The mechanical stability of sc coils manufactured using a "dry" technology still has to be tested experimentally.
- The first prototype dipoles are ready for testing at GSI and JINR, a quadrupole and a curved dipole will be ready in IV 2008.
- The redesign toward an optimized curved dipole with a single layer coil is given in the TDR, as well as working designs for the superconducting correction and steering magnets.
- Cooperation partners of Russian institutes and German Industry are prepared for R&D finalization and project realization. The structure of their consortium will depend on the optimal and effective distribution of the working tasks and the agreement about the respective in kind contributions.